GENERAFRIO

DAIKIN

DZ16SA

Cooling Capacity: 23,000 to 57,000 BTU/h
Heating Capacity: 22,600 to 57,000 BTU/h

Split-System Heat Pump
Up to 16 SEER & 9.5 HSPF

Contents

Nomenclature 2
Product Specifications 3
Expanded Cooling Data 4
Expanded Heating Data 18
Performance Data 20
AHRI Ratings (see note) 21
Dimensions 22
Wiring Diagrams 23
Accessories 25

Standard Features

- High-efficiency Copeland® scroll compressor
- Advanced Copeland® CoreSense™ technology
- High density foam compressor sound blanket
- Time-delay technology to ensure quiet reliable defrost
- Factory-installed bi-flow liquid line filter drier
- Factory-installed suction line accumulator
- Factory-installed compressor crank case heater
- Factory-installed high capacity muffler
- High- and low-pressure switches
- Service valves with sweat connections and easy access to gauge ports
- Copper tube/enhanced aluminum fin coil
- Fully charged for 15' of tubing length
- AHRI Certified; ETL Listed

Cabinet Features

- Grille-style sound control top design
- Custom Nickel Gray powder-paint finish
- 500-hour salt-spray tested
- Wire fan discharge grille
- Steel louver coil guard
- Rust-resistant screws
- Top and side maintenance access
- Single-panel access to controls with space provided for field-installed accessories
- When properly anchored, meets the 2017 Florida Building Code unit integrity requirements for hurricane-type winds (Anchor bracket kits available.)

ASK ABOUT ENERGY STAR

Proper sizing and installation of equipment is critical to achieve optimal performance. Split system air conditioners and heat pumps must be matched with appropriate coil components to meet ENERGY STAR® criteria. Ask your contractor for details or visit www.energystar.gov.

6 YEAR UNIT REPLACEMENT LIMITED WARRANTY*

12 YEAR PARTS LIMITED WARRANTY*

Intertek

AHRI CERTIFIED®

ISO 9001

ISO 14001

* Complete warranty details available from your local dealer or at www.daikincomfort.com. To receive the 6-Year Unit Replacement Limited Warranty and 12-Year Parts Limited Warranty, online registration must be completed within 60 days of installation. Additional requirements for annual maintenance are required for the Unit Replacement Limited Warranty. Online registration and some of the additional requirements are not required in California or Quebec.

D	Z	16	S	A	036	3	A	A
1	2	3,4	5	6	7,8,9	10	11	12

Brand

D - Daikin

Type

X - AC R-410A

Z - HP R-410A

SEER

14 - 14 SEER 18 - 18 SEER

16 - 16 SEER 20 - 20 SEER

Compressor

S - Single Stage

T - Two Stage

Engineering

Major & Minor revisions

* Not used for inventory control.

Voltage

1 - 208/230 V Single-Phase 60 Hz

Nominal Tonnage

018 - 1½ tons 042 - 3½ tons

024 - 2 tons 048 - 4 tons

030 - 2½ tons 060 - 5 tons

036 - 3 tons

Feature Set

A - Base D - Deluxe

C - Communicating N - Nominal

	DZ16SA 0181B*	DZ16SA 0241B*	DZ16SA 0301B*	DZ16SA 0361B*	DZ16SA 0421B*	DZ16SA 0481B*	DZ16SA 0601B*
Nominal Capacities							
Cooling (BTU/h)	18,000	24,000	30,000	36,000	42,000	48,000	60,000
Heating (BTU/h)	18,000	24,000	30,000	36,000	42,000	48,000	60,000
SEER / EER	16/13	16/13	16/13	16/13	16/13	16/13	16/12.5
Decibels	71	74	74	72	72	73	75
Compressor							
RLA	9.0	10.9	13.4	14.1	16.7	19.9	28.8
LRA	47.5	62.9	72.5	72.2	109.0	109.0	152.9
Type	Scroll	Scroll	Scroll	Scroll	Scroll	Scroll	Scroll
Condenser Fan Motor							
Horsepower	1/6	1/6	1/6	1/4	1/4	1/4	1/6
FLA	0.95	1.1	1.1	1.3	1.2	1.3	1.0
Refrigeration System							
Refrigerant Line Size[1]							
Liquid Line Size (“O.D.)	3/8"	3/8"	3/8"	3/8"	3/8"	3/8"	3/8"
Suction Line Size (“O.D.)	3/4"	3/4"	3/4"	7/8"	1 1/8"	1 1/8"	1 1/8"
Refrigerant Connection Size							
Liquid Valve Size (“O.D.)	3/8"	3/8"	3/8"	3/8"	3/8"	3/8"	3/8"
Suction Valve Size (“O.D.)	3/4"	3/4"	7/8”	7/8"	7/8”	7/8"	7/8"
Valve Connection Type	Sweat	Sweat	Sweat	Sweat	Sweat	Sweat	Sweat
Refrigerant Charge (oz.)	140	150	160	175	180	231	291
Electrical Data							
Volts/Phase (60 Hz)	208/230	208/230	208/230	208/230	208/230	208/230	208/230
Minimum Circuit Ampacity [2]	12.2	14.7	18.0	18.9	22.1	26.2	37
Max. Overcurrent Protection [3]	20	25	30	30	35	45	60
Min / Max Volts	197/253	197/253	197/253	197/253	197/253	197/253	197/253
Electrical Conduit Size	1/2" or 3/4"	1/2" or 3/4"	1/2" or 3/4"	1/2" or 3/4"	1/2" or 3/4"	1/2" or 3/4"	1/2" or 3/4"
Unit Weights							
Equipment Weight (lbs)	174	180	186	220	226	250	306
Shipping Weight (lbs)	189	200	206	240	237	270	326
ENERGY STAR® Certified [4]	ENERGY STAR	ENERGY STAR	ENERGY STAR	ENERGY STAR	ENERGY STAR	ENERGY STAR	NO

1 Tested and rated in accordance with AHRI Standard 210/240.

2 Wire size should be determined in accordance with National Electrical Codes; extensive wire runs will require larger wire sizes.

3 Must use time-delay fuses or HACR-type circuit breakers of the same size as noted.

4 Proper sizing and installation of equipment is critical to achieving optimal performance. Split system air conditioners and heat pumps must be matched with appropriate coil components to meet ENERGY STAR criteria. Ask your contractor for details or visit www.energystar.gov.
The www.energystar.gov website provides up-to-date system combinations certified to meet ENERGY STAR requirements.
See Page 21 for all ENERGY STAR certified combinations as of this document’s revision date.

Notes

- Always check the S&R plate for electrical data on the unit being installed.
- Installer will need to supply ⅞” to 1⅛” adapters for suction line connections.
- Unit is charged with refrigerant for 15’ of ⅜” liquid line. System charge must be adjusted per Installation Instructions Final Charge Procedure.
- Installation of these units requires the specified TXV Kit to be installed on the indoor coil. THE SPECIFIED TXV IS DETERMINED BY THE OUTDOOR UNIT NOT THE INDOOR COIL.

Cooling Data — DZ16SA0181B* + ASPT29B14A* + TXV

			Outdoor Ambient Temperature																							
			65ºF				75ºF				85ºF				95ºF				105ºF				115ºF			
			Entering Indoor Wet Bulb Temperature																							
IDB	Airflow		59	63	67	71	59	63	67	71	59	63	67	71	59	63	67	71	59	63	67	71	59	63	67	71
70	525	MBh	18.3	18.6	19.1	-	18.1	18.4	19.0	-	17.7	17.9	18.5	-	16.8	17.1	17.7	-	15.8	16.1	16.6	-	14.9	15.2	15.7	-
		S/T	0.62	0.54	0.41	-	0.63	0.55	0.41	-	0.65	0.58	0.44	-	1.00	0.60	0.46	-	1.00	0.62	0.48	-	1.00	0.67	0.53	-
		Δ T	20	18	14	-	20	18	14	-	20	18	15	-	20	18	14	-	19	18	14	-	21	19	15	-
		kW	0.99	0.99	0.99	-	1.11	1.11	1.11	-	1.25	1.25	1.24	-	1.39	1.39	1.39	-	1.56	1.55	1.55	-	1.75	1.74	1.74	-
		Amps	4.2	4.2	4.2	-	4.7	4.7	4.7	-	5.4	5.4	5.3	-	6.0	6.0	6.0	-	6.8	6.8	6.8	-	7.6	7.6	7.6	-
		HI PR	233	234	236	-	270	271	272	-	308	309	311	-	350	351	352	-	394	395	397	-	442	443	445	-
		LO PR	127	129	132	-	135	137	140	-	142	143	147	-	148	149	152	-	153	155	158	-	160	162	165	-
	600	MBh	18.6	18.8	19.4	-	18.4	18.6	19.2	-	17.9	18.2	18.7	-	17.1	17.3	17.9	-	16.1	16.3	16.9	-	15.2	15.4	16.0	-
		S/T	0.68	0.61	0.47	-	0.69	0.61	0.47	-	1.00	0.64	0.50	-	1.00	0.66	0.52	-	1.00	0.68	0.54	-	1.00	1.00	0.59	-
		Δ T	19	17	13	-	19	17	13	-	19	17	14	-	19	17	13	-	18	16	13	-	19	18	14	-
		kW	1.00	1.00	1.00	-	1.12	1.12	1.12	-	1.25	1.25	1.25	-	1.40	1.40	1.40	-	1.56	1.56	1.56	-	1.75	1.75	1.75	-
		Amps	4.2	4.2	4.2	-	4.8	4.8	4.8	-	5.4	5.4	5.4	-	6.1	6.0	6.0	-	6.8	6.8	6.8	-	7.7	7.7	7.7	-
		HI PR	235	236	238	-	272	273	274	-	310	311	313	-	352	353	354	-	396	397	399	-	444	445	447	-
		LO PR	129	131	134	-	137	138	142	-	144	145	148	-	149	151	154	-	155	157	160	-	162	164	167	-
	675	MBh	18.8	19.1	19.6	-	18.7	18.9	19.5	-	18.2	18.5	19.0	-	17.4	17.6	18.2	-	16.4	16.6	17.2	-	15.5	15.7	16.3	-
		S/T	0.72	0.64	0.50	-	0.73	0.65	0.51	-	1.00	0.67	0.53	-	1.00	0.69	0.55	-	1.00	0.72	0.58	-	1.00	1.00	0.63	-
		Δ T	18	16	12	-	18	16	12	-	18	16	13	-	18	16	12	-	17	16	12	-	19	17	13	-
		kW	1.00	1.00	1.00	-	1.12	1.12	1.12	-	1.26	1.26	1.26	-	1.40	1.40	1.40	-	1.57	1.57	1.56	-	1.76	1.76	1.75	-
		Amps	4.2	4.2	4.2	-	4.8	4.8	4.8	-	5.4	5.4	5.4	-	6.1	6.1	6.1	-	6.8	6.8	6.8	-	7.7	7.7	7.7	-
		HI PR	237	238	240	-	274	275	276	-	312	313	315	-	354	355	356	-	398	399	401	-	446	447	449	-
		LO PR	131	133	136	-	139	141	144	-	146	147	151	-	151	153	156	-	157	159	162	-	164	166	169	-
75	525	MBh	18.3	18.6	19.1	20.0	18.2	18.4	19.0	19.8	17.7	17.9	18.5	19.3	16.9	17.1	17.7	18.5	15.9	16.1	16.7	17.5	14.9	15.2	15.7	16.6
		S/T	0.76	0.68	0.54	0.39	1.00	0.68	0.54	0.40	1.00	0.71	0.57	0.42	1.00	0.73	0.59	0.44	1.00	1.00	0.61	0.47	1.00	1.00	0.67	0.52
		Δ T	24	22	18	15	24	22	18	15	24	22	19	15	24	22	18	15	23	22	18	15	25	23	19	16
		kW	0.99	0.99	0.99	1.00	1.11	1.11	1.11	1.12	1.25	1.25	1.24	1.25	1.39	1.39	1.39	1.40	1.55	1.55	1.55	1.56	1.75	1.74	1.74	1.75
		Amps	4.2	4.2	4.2	4.2	4.7	4.7	4.7	4.8	5.4	5.4	5.3	5.4	6.0	6.0	6.0	6.0	6.8	6.8	6.8	6.8	7.6	7.6	7.6	7.7
		HI PR	233	234	236	240	270	271	273	277	308	309	311	315	350	351	353	357	395	396	397	401	442	443	445	449
		LO PR	127	129	132	138	135	137	140	145	142	143	147	152	148	149	152	158	153	155	158	163	160	162	165	170
	600	MBh	18.6	18.8	19.4	20.2	18.4	18.7	19.2	20.0	17.9	18.2	18.7	19.6	17.1	**17.4**	17.9	18.7	16.1	16.4	16.9	17.7	15.2	15.4	16.0	16.8
		S/T	0.82	0.74	0.60	0.45	1.00	0.74	0.61	0.46	1.00	0.77	0.63	0.48	1.00	**0.79**	0.65	0.50	1.00	1.00	0.67	0.53	1.00	1.00	0.73	0.58
		Δ T	23	21	17	14	23	21	17	14	23	21	18	14	23	**21**	17	14	22	20	17	14	23	22	18	15
		kW	1.00	1.00	0.99	1.00	1.12	1.12	1.11	1.12	1.25	1.25	1.25	1.26	1.40	**1.40**	1.39	1.40	1.56	1.56	1.56	1.57	1.75	1.75	1.75	1.76
		Amps	4.2	4.2	4.2	4.2	4.8	4.8	4.8	4.8	5.4	5.4	5.4	5.4	6.0	**6.0**	6.0	6.1	6.8	6.8	6.8	6.8	7.7	7.7	7.7	7.7
		HI PR	235	236	238	242	272	273	275	279	310	311	313	317	352	**353**	355	359	397	398	399	403	444	445	447	451
		LO PR	129	131	134	139	137	138	142	147	144	145	149	154	149	**151**	154	160	155	157	160	165	162	164	167	172
	675	MBh	18.9	19.1	19.7	20.5	18.7	18.9	19.5	20.3	18.2	18.5	19.0	19.9	17.4	17.6	18.2	19.0	16.4	16.6	17.2	18.0	15.5	15.7	16.3	17.1
		S/T	0.85	0.77	0.63	0.49	1.00	0.78	0.64	0.49	1.00	0.81	0.67	0.52	1.00	0.83	0.69	0.54	1.00	1.00	0.71	0.56	1.00	1.00	0.76	0.61
		Δ T	22	20	16	13	22	20	16	13	22	20	17	13	22	20	16	13	21	20	16	13	23	21	17	14
		kW	1.00	1.00	1.00	1.01	1.12	1.12	1.12	1.13	1.26	1.26	1.25	1.26	1.40	1.40	1.40	1.41	1.57	1.56	1.56	1.57	1.76	1.76	1.75	1.76
		Amps	4.2	4.2	4.2	4.3	4.8	4.8	4.8	4.8	5.4	5.4	5.4	5.4	6.1	6.1	6.1	6.1	6.8	6.8	6.8	6.8	7.7	7.7	7.7	7.7
		HI PR	237	238	240	244	274	275	277	281	312	313	315	319	354	355	356	361	399	400	401	405	446	447	449	453
		LO PR	131	133	136	141	139	141	144	149	146	147	151	156	151	153	156	162	157	159	162	167	164	166	169	174

IDB: Entering Indoor Dry Bulb Temperature

Shaded area reflects ACCA (TVA) Rating Conditions.

kW = Total system power

High and low pressures are measured at the liquid and suction service valves.

Amps = Outdoor unit amps (compressor + fan)

Cooling Data — DZ16SA0181B* + ASPT29B14A* + TXV (cont.)

			Outdoor Ambient Temperature																							
			65ºF				75ºF				85ºF				95ºF				105ºF				115ºF			
			Entering Indoor Wet Bulb Temperature																							
IDB	Airflow		59	63	67	71	59	63	67	71	59	63	67	71	59	63	67	71	59	63	67	71	59	63	67	71
80	525	MBh	18.4	18.7	19.2	20.1	18.3	18.5	19.1	19.9	17.8	18.0	18.6	19.4	17.0	17.2	17.8	18.6	15.9	16.2	16.8	17.6	15.0	15.3	15.8	16.7
		S/T	1.00	0.81	0.67	0.52	1.00	0.81	0.67	0.53	1.00	0.84	0.70	0.55	1.00	1.00	0.72	0.57	1.00	1.00	0.74	0.59	1.00	1.00	0.79	0.65
		Δ T	28	26	23	19	28	26	22	19	28	26	23	19	28	26	22	19	27	26	22	19	29	27	23	20
		kW	0.99	0.99	0.99	1.00	1.11	1.11	1.11	1.12	1.25	1.25	1.24	1.25	1.39	1.39	1.39	1.40	1.55	1.55	1.55	1.56	1.75	1.74	1.74	1.75
		Amps	4.2	4.2	4.2	4.2	4.7	4.7	4.7	4.8	5.4	5.4	5.3	5.4	6.0	6.0	6.0	6.1	6.8	6.8	6.8	6.8	7.6	7.6	7.6	7.7
		HI PR	234	235	236	240	270	271	273	277	309	310	312	316	350	351	353	357	395	396	398	402	443	444	445	450
		LO PR	128	129	133	138	136	137	140	146	142	144	147	153	148	150	153	158	154	155	159	164	161	162	166	171
	600	MBh	18.7	18.9	19.5	20.3	18.5	18.8	19.3	20.1	18.0	18.3	18.8	19.7	17.2	17.5	**18.0**	18.8	16.2	16.4	17.0	17.8	15.3	15.5	16.1	16.9
		S/T	1.00	0.87	0.73	0.58	1.00	0.87	0.73	0.59	1.00	1.00	0.76	0.61	1.00	1.00	**0.78**	0.63	1.00	1.00	0.80	0.66	1.00	1.00	1.00	0.71
		Δ T	27	25	21	18	27	25	21	18	27	25	22	18	27	25	**21**	18	26	25	21	18	27	26	22	19
		kW	1.00	1.00	0.99	1.00	1.12	1.12	1.12	1.12	1.25	1.25	1.25	1.26	1.40	1.40	**1.40**	1.40	1.56	1.56	1.56	1.57	1.75	1.75	1.75	1.76
		Amps	4.2	4.2	4.2	4.2	4.8	4.8	4.8	4.8	5.4	5.4	5.4	5.4	6.1	6.0	**6.0**	6.1	6.8	6.8	6.8	6.8	7.7	7.7	7.7	7.7
		HI PR	236	237	238	242	272	273	275	279	311	312	314	318	352	353	**355**	359	397	398	400	404	445	446	447	451
		LO PR	130	131	135	140	137	139	142	148	144	146	149	154	150	152	**155**	160	156	157	160	166	163	164	167	173
	675	MBh	18.9	19.2	19.8	20.6	18.8	19.0	19.6	20.4	18.3	18.6	19.1	19.9	17.5	17.7	18.3	19.1	16.5	16.7	17.3	18.1	15.6	15.8	16.4	17.2
		S/T	1.00	0.90	0.76	0.62	1.00	0.91	0.77	0.62	1.00	1.00	0.80	0.65	1.00	1.00	0.82	0.67	1.00	1.00	0.84	0.69	1.00	1.00	1.00	0.74
		Δ T	26	24	21	17	26	24	20	17	26	24	21	17	26	24	20	17	25	24	20	17	27	25	21	18
		kW	1.00	1.00	1.00	1.01	1.12	1.12	1.12	1.13	1.26	1.26	1.26	1.26	1.40	1.40	1.40	1.41	1.57	1.57	1.56	1.57	1.76	1.76	1.75	1.76
		Amps	4.2	4.2	4.2	4.3	4.8	4.8	4.8	4.8	5.4	5.4	5.4	5.4	6.1	6.1	6.1	6.1	6.8	6.8	6.8	6.8	7.7	7.7	7.7	7.7
		HI PR	238	239	240	244	274	275	277	281	313	314	315	320	354	355	357	361	399	400	402	406	447	448	449	453
		LO PR	132	133	137	142	140	141	144	150	146	148	151	157	152	154	157	162	158	159	162	168	165	166	170	175
85	525	MBh	18.7	19.0	19.5	20.4	18.6	18.8	19.4	20.2	18.1	18.3	18.9	19.7	17.3	17.5	18.1	18.9	16.3	16.5	17.1	17.9	15.3	15.6	16.1	17.0
		S/T	1.00	0.91	0.77	0.62	1.00	1.00	0.78	0.63	1.00	1.00	0.80	0.66	1.00	1.00	0.82	0.68	1.00	1.00	1.00	0.70	1.00	1.00	1.00	0.75
		Δ T	31	30	26	23	31	29	26	23	32	30	26	23	31	29	26	23	31	29	26	22	32	30	27	23
		kW	0.99	0.99	0.99	1.00	1.11	1.11	1.11	1.12	1.25	1.25	1.25	1.26	1.39	1.39	1.39	1.40	1.56	1.56	1.55	1.56	1.75	1.75	1.75	1.75
		Amps	4.2	4.2	4.2	4.2	4.8	4.7	4.7	4.8	5.4	5.4	5.4	5.4	6.0	6.0	6.0	6.1	6.8	6.8	6.8	6.8	7.7	7.6	7.6	7.7
		HI PR	235	236	237	241	271	272	274	278	310	311	313	317	351	352	354	358	396	397	399	403	444	445	447	451
		LO PR	130	131	135	140	138	139	142	148	144	146	149	155	150	152	155	160	156	157	160	166	163	164	168	173
	600	MBh	19.0	19.2	19.8	20.6	18.8	19.1	19.6	20.4	18.3	18.6	19.1	20.0	17.5	17.8	18.3	19.1	16.5	16.8	17.3	18.1	15.6	15.8	16.4	17.2
		S/T	1.00	0.97	0.83	0.69	1.00	1.00	0.84	0.69	1.00	1.00	0.86	0.72	1.00	1.00	0.88	0.74	1.00	1.00	1.00	0.76	1.00	1.00	1.00	0.81
		Δ T	30	28	25	21	30	28	25	21	30	29	25	22	30	28	25	21	30	28	25	21	31	29	26	22
		kW	1.00	1.00	1.00	1.01	1.12	1.12	1.12	1.13	1.26	1.25	1.25	1.26	1.40	1.40	1.40	1.41	1.56	1.56	1.56	1.57	1.75	1.75	1.75	1.76
		Amps	4.2	4.2	4.2	4.3	4.8	4.8	4.8	4.8	5.4	5.4	5.4	5.4	6.1	6.1	6.0	6.1	6.8	6.8	6.8	6.8	7.7	7.7	7.7	7.7
		HI PR	237	238	239	243	273	274	276	280	312	313	315	319	353	354	356	360	398	399	401	405	446	447	449	453
		LO PR	132	133	136	142	139	141	144	150	146	148	151	156	152	153	157	162	158	159	162	168	165	166	169	175
	675	MBh	19.3	19.5	20.1	20.9	19.1	19.4	19.9	20.7	18.6	18.9	19.4	20.3	17.8	18.1	18.6	19.4	16.8	17.0	17.6	18.4	15.9	16.1	16.7	17.5
		S/T	1.00	1.00	0.87	0.72	1.00	1.00	0.87	0.73	1.00	1.00	0.90	0.75	1.00	1.00	1.00	0.77	1.00	1.00	1.00	0.80	1.00	1.00	1.00	0.85
		Δ T	29	27	24	21	29	27	24	21	30	28	24	21	29	27	24	20	29	27	24	20	30	28	25	21
		kW	1.01	1.00	1.00	1.01	1.13	1.12	1.12	1.13	1.26	1.26	1.26	1.27	1.41	1.41	1.40	1.41	1.57	1.57	1.57	1.57	1.76	1.76	1.76	1.77
		Amps	4.3	4.2	4.2	4.3	4.8	4.8	4.8	4.8	5.4	5.4	5.4	5.4	6.1	6.1	6.1	6.1	6.8	6.8	6.8	6.9	7.7	7.7	7.7	7.7
		HI PR	239	240	241	245	275	276	278	282	314	315	317	321	355	356	358	362	400	401	403	407	448	449	450	455
		LO PR	134	135	139	144	141	143	146	152	148	150	153	158	154	156	159	164	160	161	164	170	167	168	171	177

IDB: Entering Indoor Dry Bulb Temperature

Shaded area reflects AHRI Rating Conditions.

kW = Total system power

High and low pressures are measured at the liquid and suction service valves.

Amps = Outdoor unit amps (compressor + fan)

Cooling Data — DZ16SA0241B* + ASPT29B14A* + TXV

			Outdoor Ambient Temperature																							
			65ºF				75ºF				85ºF				95ºF				105ºF				115ºF			
			Entering Indoor Wet Bulb Temperature																							
IDB	Airflow		59	63	67	71	59	63	67	71	59	63	67	71	59	63	67	71	59	63	67	71	59	63	67	71
70	700	MBh	24.4	24.8	25.5	-	24.2	24.5	25.3	-	23.6	23.9	24.6	-	22.5	22.8	23.5	-	21.1	21.5	22.2	-	19.9	20.2	21.0	-
		S/T	0.62	0.54	0.40	-	0.62	0.55	0.41	-	0.65	0.57	0.43	-	1.00	0.59	0.45	-	1.00	0.62	0.48	-	1.00	0.67	0.53	-
		Δ T	20	18	15	-	20	18	14	-	20	18	15	-	20	18	14	-	19	18	14	-	21	19	15	-
		kW	1.33	1.32	1.32	-	1.49	1.48	1.48	-	1.66	1.66	1.66	-	1.86	1.86	1.85	-	2.07	2.07	2.07	-	2.32	2.32	2.32	-
		Amps	5.5	5.5	5.5	-	6.2	6.2	6.2	-	7.0	7.0	7.0	-	7.9	7.9	7.9	-	8.9	8.9	8.9	-	10.1	10.1	10.0	-
		HI PR	241	242	243	-	279	280	281	-	318	319	321	-	361	362	364	-	407	408	410	-	457	458	459	-
		LO PR	126	127	131	-	133	135	138	-	140	142	145	-	146	147	151	-	151	153	156	-	158	160	163	-
	800	MBh	24.7	25.1	25.8	-	24.5	24.9	25.6	-	23.9	24.2	25.0	-	22.8	23.1	23.9	-	21.4	21.8	22.5	-	20.2	20.6	21.3	-
		S/T	0.68	0.60	0.46	-	0.69	0.61	0.47	-	0.71	0.63	0.50	-	1.00	0.65	0.52	-	1.00	0.68	0.54	-	1.00	0.73	0.59	-
		Δ T	19	17	13	-	19	17	13	-	19	17	14	-	19	17	13	-	18	17	13	-	19	18	14	-
		kW	1.33	1.33	1.33	-	1.49	1.49	1.49	-	1.67	1.67	1.67	-	1.86	1.86	1.86	-	2.08	2.08	2.08	-	2.33	2.33	2.33	-
		Amps	5.5	5.5	5.5	-	6.3	6.2	6.2	-	7.1	7.1	7.1	-	8.0	7.9	7.9	-	8.9	8.9	8.9	-	10.1	10.1	10.1	-
		HI PR	243	244	245	-	281	282	283	-	320	321	323	-	363	364	366	-	409	411	412	-	459	460	462	-
		LO PR	128	129	132	-	135	137	140	-	142	144	147	-	148	149	152	-	153	155	158	-	160	162	165	-
	900	MBh	25.1	25.5	26.2	-	24.9	25.2	26.0	-	24.3	24.6	25.3	-	23.2	23.5	24.2	-	21.8	22.2	22.9	-	20.6	21.0	21.7	-
		S/T	0.71	0.64	0.50	-	0.72	0.64	0.50	-	1.00	0.67	0.53	-	1.00	0.69	0.55	-	1.00	0.71	0.57	-	1.00	1.00	0.63	-
		Δ T	18	16	12	-	18	16	12	-	18	16	13	-	18	16	12	-	17	16	12	-	19	17	13	-
		kW	1.34	1.34	1.34	-	1.50	1.50	1.50	-	1.68	1.68	1.67	-	1.87	1.87	1.87	-	2.09	2.09	2.08	-	2.34	2.34	2.34	-
		Amps	5.6	5.6	5.5	-	6.3	6.3	6.3	-	7.1	7.1	7.1	-	8.0	8.0	8.0	-	9.0	9.0	9.0	-	10.1	10.1	10.1	-
		HI PR	245	246	247	-	283	284	285	-	322	323	325	-	365	366	368	-	411	413	414	-	461	462	463	-
		LO PR	130	131	134	-	137	139	142	-	144	146	149	-	150	151	154	-	155	157	160	-	162	164	167	-
75	700	MBh	24.4	24.8	25.5	26.6	24.2	24.6	25.3	26.4	23.6	23.9	24.6	25.8	22.5	22.8	23.6	24.7	21.1	21.5	22.2	23.3	19.9	20.3	21.0	22.1
		S/T	0.75	0.67	0.53	0.39	1.00	0.68	0.54	0.39	1.00	0.70	0.57	0.42	1.00	0.72	0.59	0.44	1.00	0.75	0.61	0.46	1.00	1.00	0.66	0.52
		Δ T	24	22	19	15	24	22	18	15	24	22	19	15	24	22	18	15	23	22	18	15	25	23	19	16
		kW	1.32	1.32	1.32	1.33	1.48	1.48	1.48	1.49	1.66	1.66	1.66	1.67	1.86	1.85	1.85	1.86	2.07	2.07	2.07	2.08	2.32	2.32	2.32	2.33
		Amps	5.5	5.5	5.5	5.5	6.2	6.2	6.2	6.3	7.0	7.0	7.0	7.1	7.9	7.9	7.9	7.9	8.9	8.9	8.9	8.9	10.1	10.0	10.0	10.1
		HI PR	241	242	244	248	279	280	282	286	319	320	321	326	361	363	364	368	408	409	410	415	457	458	460	464
		LO PR	126	127	131	136	133	135	138	144	140	142	145	150	146	147	151	156	151	153	156	161	158	160	163	168
	800	MBh	24.8	25.1	25.8	26.9	24.5	24.9	25.6	26.7	23.9	24.2	25.0	26.1	22.8	**23.1**	23.9	25.0	21.5	21.8	22.5	23.6	20.2	20.6	21.3	22.4
		S/T	0.81	0.73	0.60	0.45	1.00	0.74	0.60	0.46	1.00	0.77	0.63	0.48	1.00	**0.79**	0.65	0.50	1.00	1.00	0.67	0.52	1.00	1.00	0.72	0.58
		Δ T	23	21	17	14	23	21	17	14	23	21	18	14	23	**21**	17	14	22	21	17	14	23	22	18	15
		kW	1.33	1.33	1.33	1.34	1.49	1.49	1.49	1.50	1.67	1.67	1.67	1.68	1.86	**1.86**	1.86	1.87	2.08	2.08	2.08	2.09	2.33	2.33	2.33	2.34
		Amps	5.5	5.5	5.5	5.6	6.3	6.2	6.2	6.3	7.1	7.1	7.0	7.1	7.9	**7.9**	7.9	8.0	8.9	8.9	8.9	9.0	10.1	10.1	10.1	10.1
		HI PR	243	244	246	250	281	282	284	288	321	322	323	328	364	**365**	366	370	410	411	412	417	459	460	462	466
		LO PR	128	129	132	138	135	137	140	145	142	144	147	152	148	**149**	152	158	153	155	158	163	160	162	165	170
	900	MBh	25.1	25.5	26.2	27.3	24.9	25.3	26.0	27.1	24.3	24.6	25.4	26.5	23.2	23.5	24.3	25.4	21.8	22.2	22.9	24.0	20.6	21.0	21.7	22.8
		S/T	0.85	0.77	0.63	0.48	1.00	0.77	0.64	0.49	1.00	0.80	0.66	0.52	1.00	0.82	0.68	0.54	1.00	1.00	0.70	0.56	1.00	1.00	0.76	0.61
		Δ T	22	20	16	13	22	20	16	13	22	20	17	13	22	20	16	13	21	20	16	13	23	21	17	14
		kW	1.34	1.34	1.34	1.35	1.50	1.50	1.50	1.51	1.68	1.68	1.67	1.69	1.87	1.87	1.87	1.88	2.09	2.08	2.08	2.09	2.34	2.34	2.33	2.35
		Amps	5.6	5.5	5.5	5.6	6.3	6.3	6.3	6.3	7.1	7.1	7.1	7.1	8.0	8.0	8.0	8.0	9.0	9.0	8.9	9.0	10.1	10.1	10.1	10.2
		HI PR	245	246	248	252	283	284	286	290	323	324	325	330	365	367	368	372	412	413	414	419	461	462	464	468
		LO PR	130	131	134	140	137	139	142	147	144	146	149	154	150	151	154	160	155	157	160	165	162	164	167	172

IDB: Entering Indoor Dry Bulb Temperature

Shaded area reflects ACCA (TVA) Rating Conditions.

kW = Total system power

High and low pressures are measured at the liquid and suction service valves.

Amps = Outdoor unit amps (compressor + fan)

Cooling Data — DZ16SA0241B* + ASPT29B14A* + TXV (cont.)

			Outdoor Ambient Temperature																							
			65ºF				75ºF				85ºF				95ºF				105ºF				115ºF			
			Entering Indoor Wet Bulb Temperature																							
IDB	Airflow		59	63	67	71	59	63	67	71	59	63	67	71	59	63	67	71	59	63	67	71	59	63	67	71
80	700	MBh	24.6	24.9	25.6	26.7	24.3	24.7	25.4	26.5	23.7	24.0	24.8	25.9	22.6	22.9	23.7	24.8	21.3	21.6	22.3	23.5	20.0	20.4	21.1	22.2
		S/T	1.00	0.80	0.66	0.52	1.00	0.81	0.67	0.52	1.00	0.83	0.69	0.55	1.00	1.00	0.71	0.57	1.00	1.00	0.74	0.59	1.00	1.00	0.79	0.64
		Δ T	28	26	23	19	28	26	23	19	28	26	23	19	28	26	22	19	27	26	22	19	29	27	23	20
		kW	1.33	1.32	1.32	1.33	1.49	1.48	1.48	1.49	1.66	1.66	1.66	1.67	1.86	1.86	1.85	1.86	2.07	2.07	2.07	2.08	2.32	2.32	2.32	2.33
		Amps	5.5	5.5	5.5	5.5	6.2	6.2	6.2	6.3	7.0	7.0	7.0	7.1	7.9	7.9	7.9	8.0	8.9	8.9	8.9	8.9	10.1	10.1	10.0	10.1
		HI PR	241	242	244	248	279	280	282	286	319	320	322	326	362	363	365	369	408	409	411	415	457	458	460	464
		LO PR	126	128	131	136	134	136	139	144	141	142	145	151	146	148	151	156	152	153	157	162	159	160	164	169
	800	MBh	24.9	25.2	26.0	27.1	24.7	25.0	25.7	26.8	24.0	24.4	25.1	26.2	22.9	23.3	**24.0**	25.1	21.6	21.9	22.7	23.8	20.4	20.7	21.4	22.5
		S/T	1.00	0.86	0.72	0.58	1.00	0.87	0.73	0.58	1.00	0.89	0.76	0.61	1.00	1.00	**0.78**	0.63	1.00	1.00	0.80	0.65	1.00	1.00	0.85	0.70
		Δ T	27	25	21	18	27	25	21	18	27	25	22	18	27	25	**21**	18	26	25	21	18	28	26	22	19
		kW	1.33	1.33	1.33	1.34	1.49	1.49	1.49	1.50	1.67	1.67	1.67	1.68	1.86	1.86	**1.86**	1.87	2.08	2.08	2.08	2.09	2.33	2.33	2.33	2.34
		Amps	5.5	5.5	5.5	5.6	6.3	6.2	6.2	6.3	7.1	7.1	7.1	7.1	8.0	7.9	**7.9**	8.0	8.9	8.9	8.9	9.0	10.1	10.1	10.1	10.1
		HI PR	243	244	246	250	281	282	284	288	321	322	324	328	364	365	**367**	371	410	411	413	417	459	460	462	466
		LO PR	128	130	133	138	136	137	141	146	143	144	147	153	148	150	**153**	158	154	155	159	164	161	162	165	171
	900	MBh	25.3	25.6	26.3	27.5	25.0	25.4	26.1	27.2	24.4	24.8	25.5	26.6	23.3	23.7	24.4	25.5	22.0	22.3	23.0	24.2	20.7	21.1	21.8	22.9
		S/T	1.00	0.90	0.76	0.61	1.00	0.90	0.76	0.62	1.00	1.00	0.79	0.64	1.00	1.00	0.81	0.66	1.00	1.00	0.83	0.69	1.00	1.00	1.00	0.74
		Δ T	26	24	21	17	26	24	20	17	26	24	21	17	26	24	20	17	25	24	20	17	27	25	21	18
		kW	1.34	1.34	1.34	1.35	1.50	1.50	1.50	1.51	1.68	1.68	1.67	1.69	1.87	1.87	1.87	1.88	2.09	2.09	2.08	2.10	2.34	2.34	2.34	2.35
		Amps	5.6	5.6	5.5	5.6	6.3	6.3	6.3	6.3	7.1	7.1	7.1	7.1	8.0	8.0	8.0	8.0	9.0	9.0	9.0	9.0	10.1	10.1	10.1	10.2
		HI PR	245	246	248	252	283	284	286	290	323	324	326	330	366	367	369	373	412	413	415	419	461	462	464	468
		LO PR	130	132	135	140	138	139	143	148	145	146	149	155	150	152	155	160	156	157	161	166	163	164	168	173
85	700	MBh	25.0	25.3	26.0	27.2	24.8	25.1	25.8	26.9	24.1	24.5	25.2	26.3	23.0	23.4	24.1	25.2	21.7	22.0	22.7	23.9	20.5	20.8	21.5	22.6
		S/T	1.00	0.90	0.77	0.62	1.00	1.00	0.77	0.63	1.00	1.00	0.80	0.65	1.00	1.00	0.82	0.67	1.00	1.00	1.00	0.69	1.00	1.00	1.00	0.75
		Δ T	31	30	26	23	31	30	26	23	32	30	26	23	31	29	26	23	31	29	26	22	32	30	27	23
		kW	1.33	1.33	1.32	1.34	1.49	1.49	1.48	1.50	1.67	1.67	1.66	1.67	1.86	1.86	1.86	1.87	2.07	2.07	2.07	2.08	2.33	2.33	2.32	2.34
		Amps	5.5	5.5	5.5	5.5	6.2	6.2	6.2	6.3	7.0	7.0	7.0	7.1	7.9	7.9	7.9	8.0	8.9	8.9	8.9	9.0	10.1	10.1	10.1	10.1
		HI PR	242	243	245	249	280	281	283	287	320	321	323	327	363	364	366	370	409	410	412	416	459	460	461	465
		LO PR	128	130	133	138	136	137	141	146	143	144	147	153	148	150	153	158	154	155	159	164	161	162	166	171
	800	MBh	25.3	25.6	26.4	27.5	25.1	25.4	26.1	27.3	24.4	24.8	25.5	26.6	23.3	23.7	24.4	25.5	22.0	22.3	23.1	24.2	20.8	21.1	21.8	23.0
		S/T	1.00	0.97	0.83	0.68	1.00	1.00	0.83	0.69	1.00	1.00	0.86	0.71	1.00	1.00	0.88	0.73	1.00	1.00	1.00	0.76	1.00	1.00	1.00	0.81
		Δ T	30	28	25	22	30	28	25	21	30	29	25	22	30	28	25	21	30	28	25	21	31	29	26	22
		kW	1.34	1.34	1.33	1.35	1.50	1.50	1.49	1.50	1.67	1.67	1.67	1.68	1.87	1.87	1.86	1.88	2.08	2.08	2.08	2.09	2.34	2.33	2.33	2.34
		Amps	5.5	5.5	5.5	5.6	6.3	6.3	6.3	6.3	7.1	7.1	7.1	7.1	8.0	8.0	7.9	8.0	9.0	8.9	8.9	9.0	10.1	10.1	10.1	10.1
		HI PR	244	246	247	251	282	283	285	289	322	323	325	329	365	366	368	372	411	412	414	418	461	462	463	467
		LO PR	130	132	135	140	138	139	142	148	144	146	149	155	150	152	155	160	156	157	160	166	163	164	167	173
	900	MBh	25.7	26.0	26.7	27.9	25.5	25.8	26.5	27.6	24.8	25.2	25.9	27.0	23.7	24.1	24.8	25.9	22.4	22.7	23.5	24.6	21.2	21.5	22.2	23.3
		S/T	1.00	1.00	0.86	0.72	1.00	1.00	0.87	0.72	1.00	1.00	0.89	0.75	1.00	1.00	0.91	0.77	1.00	1.00	1.00	0.79	1.00	1.00	1.00	0.84
		Δ T	29	28	24	21	29	27	24	21	30	28	24	21	29	27	24	21	29	27	24	20	30	28	25	21
		kW	1.34	1.34	1.34	1.35	1.50	1.50	1.50	1.51	1.68	1.68	1.68	1.69	1.87	1.87	1.87	1.88	2.09	2.09	2.09	2.10	2.34	2.34	2.34	2.35
		Amps	5.6	5.6	5.6	5.6	6.3	6.3	6.3	6.3	7.1	7.1	7.1	7.2	8.0	8.0	8.0	8.0	9.0	9.0	9.0	9.0	10.1	10.1	10.1	10.2
		HI PR	246	248	249	253	284	285	287	291	324	325	327	331	367	368	370	374	413	414	416	420	463	464	465	469
		LO PR	132	134	137	142	140	141	145	150	146	148	151	157	152	154	157	162	158	159	162	168	165	166	169	175

IDB: Entering Indoor Dry Bulb Temperature

High and low pressures are measured at the liquid and suction service valves.

Shaded area reflects AHRI Rating Conditions.

kW = Total system power

Amps = Outdoor unit amps (compressor + fan)

Cooling Data — DZ16SA0301B* + ASPT37C14A* + TXV

			Outdoor Ambient Temperature																							
			65ºF				75ºF				85ºF				95ºF				105ºF				115ºF			
			Entering Indoor Wet Bulb Temperature																							
IDB	Airflow		59	63	67	71	59	63	67	71	59	63	67	71	59	63	67	71	59	63	67	71	59	63	67	71
70	875	MBh	29.4	29.8	30.7	-	29.1	29.5	30.4	-	28.3	28.8	29.6	-	27.0	27.4	28.3	-	25.4	25.8	26.7	-	23.9	24.4	25.2	-
		S/T	0.63	0.56	0.42	-	0.64	0.56	0.42	-	0.67	0.59	0.45	-	1.00	0.61	0.47	-	1.00	0.63	0.49	-	1.00	0.68	0.54	-
		Δ T	20	18	15	-	20	18	15	-	20	18	15	-	20	18	15	-	20	18	14	-	21	19	15	-
		kW	1.57	1.57	1.56	-	1.77	1.77	1.76	-	1.99	1.99	1.98	-	2.23	2.23	2.23	-	2.50	2.50	2.49	-	2.81	2.81	2.81	-
		Amps	6.5	6.4	6.4	-	7.4	7.4	7.3	-	8.4	8.4	8.4	-	9.5	9.5	9.5	-	10.7	10.7	10.7	-	12.2	12.1	12.1	-
		HI PR	246	247	249	-	285	286	288	-	325	327	328	-	369	370	372	-	416	417	419	-	467	468	469	-
		LO PR	124	125	129	-	131	133	136	-	138	140	143	-	144	145	148	-	149	151	154	-	156	157	161	-
	975	MBh	29.7	30.1	31.0	-	29.4	29.8	30.7	-	28.7	29.1	29.9	-	27.3	27.8	28.6	-	25.7	26.1	27.0	-	24.3	24.7	25.6	-
		S/T	0.68	0.60	0.46	-	0.69	0.61	0.47	-	0.71	0.64	0.50	-	1.00	0.66	0.52	-	1.00	0.68	0.54	-	1.00	0.73	0.59	-
		Δ T	19	17	14	-	19	17	14	-	19	17	14	-	19	17	14	-	19	17	13	-	20	18	15	-
		kW	1.58	1.58	1.57	-	1.78	1.77	1.77	-	2.00	2.00	1.99	-	2.24	2.24	2.23	-	2.51	2.51	2.50	-	2.82	2.82	2.82	-
		Amps	6.5	6.5	6.5	-	7.4	7.4	7.4	-	8.4	8.4	8.4	-	9.5	9.5	9.5	-	10.8	10.7	10.7	-	12.2	12.2	12.2	-
		HI PR	248	249	251	-	287	288	289	-	327	328	330	-	371	372	374	-	418	419	421	-	468	469	471	-
		LO PR	125	127	130	-	133	134	138	-	140	141	144	-	145	147	150	-	151	152	155	-	157	159	162	-
	1125	MBh	30.3	30.7	31.6	-	30.0	30.4	31.3	-	29.2	29.7	30.5	-	27.9	28.3	29.2	-	26.3	26.7	27.6	-	24.8	25.3	26.1	-
		S/T	0.72	0.64	0.50	-	0.73	0.65	0.51	-	0.75	0.67	0.54	-	1.00	0.69	0.56	-	1.00	0.72	0.58	-	1.00	0.77	0.63	-
		Δ T	18	16	13	-	18	16	12	-	18	16	13	-	18	16	12	-	18	16	12	-	19	17	13	-
		kW	1.59	1.59	1.58	-	1.79	1.78	1.78	-	2.01	2.01	2.00	-	2.25	2.25	2.24	-	2.52	2.52	2.51	-	2.83	2.83	2.83	-
		Amps	6.5	6.5	6.5	-	7.5	7.4	7.4	-	8.5	8.5	8.4	-	9.6	9.6	9.5	-	10.8	10.8	10.8	-	12.2	12.2	12.2	-
		HI PR	250	251	253	-	289	290	292	-	330	331	332	-	373	374	376	-	421	422	423	-	471	472	474	-
		LO PR	128	129	133	-	135	137	140	-	142	144	147	-	148	149	152	-	153	155	158	-	160	161	165	-
75	875	MBh	29.4	29.8	30.7	32.0	29.1	29.5	30.4	31.7	28.4	28.8	29.6	31.0	27.0	27.5	28.3	29.7	25.4	25.8	26.7	28.1	24.0	24.4	25.2	26.6
		S/T	0.77	0.69	0.55	0.40	0.77	0.69	0.56	0.41	1.00	0.72	0.58	0.43	1.00	0.74	0.60	0.45	1.00	0.76	0.62	0.48	1.00	1.00	0.68	0.53
		Δ T	24	22	19	15	24	22	19	15	24	22	19	15	24	22	19	15	24	22	18	15	25	23	20	16
		kW	1.57	1.57	1.56	1.58	1.77	1.76	1.76	1.78	1.99	1.99	1.98	2.00	2.23	2.23	2.22	2.24	2.50	2.50	2.49	2.51	2.81	2.81	2.81	2.82
		Amps	6.4	6.4	6.4	6.5	7.4	7.4	7.3	7.4	8.4	8.4	8.4	8.4	9.5	9.5	9.5	9.5	10.7	10.7	10.7	10.8	12.2	12.1	12.1	12.2
		HI PR	246	247	249	253	285	286	288	292	326	327	328	333	369	370	372	376	417	418	419	424	467	468	470	474
		LO PR	124	125	129	134	131	133	136	141	138	140	143	148	144	145	148	154	149	151	154	159	156	157	161	166
	975	MBh	29.7	30.1	31.0	32.3	29.4	29.9	30.7	32.1	28.7	29.1	30.0	31.3	27.4	**27.8**	28.6	30.0	25.8	26.2	27.0	28.4	24.3	24.7	25.6	26.9
		S/T	0.81	0.74	0.60	0.45	0.82	0.74	0.60	0.46	1.00	0.77	0.63	0.48	1.00	**0.79**	0.65	0.50	1.00	0.81	0.67	0.53	1.00	1.00	0.72	0.58
		Δ T	23	21	18	14	23	21	18	14	23	21	18	14	23	**21**	18	14	23	21	17	14	24	22	19	15
		kW	1.58	1.57	1.57	1.59	1.77	1.77	1.77	1.78	2.00	2.00	1.99	2.01	2.24	**2.24**	2.23	2.25	2.51	2.50	2.50	2.52	2.82	2.82	2.82	2.83
		Amps	6.5	6.5	6.5	6.5	7.4	7.4	7.4	7.4	8.4	8.4	8.4	8.5	9.5	**9.5**	9.5	9.6	10.7	10.7	10.7	10.8	12.2	12.2	12.2	12.2
		HI PR	248	249	251	255	287	288	290	294	327	328	330	334	371	**372**	374	378	418	419	421	425	469	470	471	476
		LO PR	125	127	130	135	133	134	138	143	140	141	144	149	145	**147**	150	155	151	152	155	161	157	159	162	167
	1125	MBh	30.3	30.7	31.6	32.9	30.0	30.4	31.3	32.6	29.3	29.7	30.5	31.9	27.9	28.4	29.2	30.6	26.3	26.7	27.6	29.0	24.9	25.3	26.2	27.5
		S/T	0.85	0.78	0.64	0.49	1.00	0.78	0.64	0.50	1.00	0.81	0.67	0.52	1.00	0.83	0.69	0.54	1.00	1.00	0.71	0.56	1.00	1.00	0.76	0.62
		Δ T	22	20	17	13	22	20	17	13	22	20	17	13	22	20	17	13	22	20	16	13	23	21	17	14
		kW	1.59	1.58	1.58	1.60	1.79	1.78	1.78	1.80	2.01	2.01	2.00	2.02	2.25	2.25	2.24	2.26	2.52	2.51	2.51	2.53	2.83	2.83	2.83	2.84
		Amps	6.5	6.5	6.5	6.6	7.4	7.4	7.4	7.5	8.5	8.5	8.4	8.5	9.6	9.6	9.5	9.6	10.8	10.8	10.8	10.8	12.2	12.2	12.2	12.3
		HI PR	250	252	253	258	289	290	292	296	330	331	333	337	374	375	376	381	421	422	424	428	471	472	474	478
		LO PR	128	129	133	138	135	137	140	145	142	144	147	152	148	149	152	158	153	155	158	163	160	161	165	170

IDB: Entering Indoor Dry Bulb Temperature

Shaded area reflects ACCA (TVA) Rating Conditions.

kW = Total system power

High and low pressures are measured at the liquid and suction service valves.

Amps = Outdoor unit amps (compressor + fan)

Cooling Data — DZ16SA0301B* + ASPT37C14A* + TXV (cont.)

			Outdoor Ambient Temperature																							
			65ºF				75ºF				85ºF				95ºF				105ºF				115ºF			
			Entering Indoor Wet Bulb Temperature																							
IDB	Airflow		59	63	67	71	59	63	67	71	59	63	67	71	59	63	67	71	59	63	67	71	59	63	67	71
80	875	MBh	29.5	29.9	30.8	32.2	29.3	29.7	30.6	31.9	28.5	28.9	29.8	31.1	27.2	27.6	28.5	29.8	25.6	26.0	26.9	28.2	24.1	24.5	25.4	26.7
		S/T	1.00	0.82	0.68	0.53	1.00	0.82	0.68	0.54	1.00	0.85	0.71	0.56	1.00	1.00	0.73	0.58	1.00	1.00	0.75	0.61	1.00	1.00	0.80	0.66
		Δ T	28	26	23	19	28	26	23	19	28	27	23	19	28	26	23	19	28	26	23	19	29	27	24	20
		kW	1.57	1.57	1.56	1.58	1.77	1.77	1.76	1.78	1.99	1.99	1.98	2.00	2.23	2.23	2.23	2.24	2.50	2.50	2.49	2.51	2.81	2.81	2.81	2.82
		Amps	6.5	6.4	6.4	6.5	7.4	7.4	7.3	7.4	8.4	8.4	8.4	8.4	9.5	9.5	9.5	9.5	10.7	10.7	10.7	10.8	12.2	12.1	12.1	12.2
		HI PR	247	248	250	254	285	287	288	293	326	327	329	333	370	371	373	377	417	418	420	424	467	468	470	474
		LO PR	124	126	129	134	132	134	137	142	139	140	143	149	144	146	149	154	150	151	154	160	156	158	161	166
	975	MBh	29.9	30.3	31.1	32.5	29.6	30.0	30.9	32.2	28.8	29.2	30.1	31.5	27.5	27.9	**28.8**	30.1	25.9	26.3	27.2	28.5	24.4	24.8	25.7	27.1
		S/T	1.00	0.86	0.73	0.58	1.00	0.87	0.73	0.59	1.00	0.90	0.76	0.61	1.00	1.00	**0.78**	0.63	1.00	1.00	0.80	0.65	1.00	1.00	0.85	0.71
		Δ T	27	25	22	18	27	25	22	18	27	26	22	19	27	25	**22**	18	27	25	22	18	28	26	23	19
		kW	1.58	1.58	1.57	1.59	1.78	1.77	1.77	1.79	2.00	2.00	1.99	2.01	2.24	2.24	**2.23**	2.25	2.51	2.51	2.50	2.52	2.82	2.82	2.82	2.83
		Amps	6.5	6.5	6.5	6.5	7.4	7.4	7.4	7.5	8.4	8.4	8.4	8.5	9.5	9.5	**9.5**	9.6	10.8	10.7	10.7	10.8	12.2	12.2	12.2	12.2
		HI PR	248	249	251	256	287	288	290	294	328	329	331	335	372	373	**374**	379	419	420	421	426	469	470	472	476
		LO PR	126	128	131	136	134	135	138	143	140	142	145	150	146	147	**150**	156	151	153	156	161	158	159	163	168
	1125	MBh	30.4	30.8	31.7	33.1	30.2	30.6	31.5	32.8	29.4	29.8	30.7	32.0	28.1	28.5	29.4	30.7	26.5	26.9	27.8	29.1	25.0	25.4	26.3	27.6
		S/T	1.00	0.90	0.76	0.62	1.00	0.91	0.77	0.62	1.00	0.94	0.80	0.65	1.00	1.00	0.82	0.67	1.00	1.00	0.84	0.69	1.00	1.00	0.89	0.75
		Δ T	26	24	21	17	26	24	21	17	26	24	21	17	26	24	21	17	26	24	20	17	27	25	22	18
		kW	1.59	1.59	1.58	1.60	1.79	1.78	1.78	1.80	2.01	2.01	2.00	2.02	2.25	2.25	2.24	2.26	2.52	2.52	2.51	2.53	2.83	2.83	2.83	2.84
		Amps	6.5	6.5	6.5	6.6	7.5	7.4	7.4	7.5	8.5	8.5	8.4	8.5	9.6	9.6	9.5	9.6	10.8	10.8	10.8	10.8	12.2	12.2	12.2	12.3
		HI PR	251	252	254	258	290	291	292	297	330	331	333	337	374	375	377	381	421	422	424	428	472	473	474	479
		LO PR	128	130	133	138	136	138	141	146	143	144	147	153	148	150	153	158	154	155	158	164	160	162	165	170
85	875	MBh	30.0	30.4	31.3	32.7	29.8	30.2	31.1	32.4	29.0	29.4	30.3	31.6	27.7	28.1	29.0	30.3	26.1	26.5	27.4	28.7	24.6	25.0	25.9	27.2
		S/T	1.00	0.92	0.78	0.63	1.00	0.93	0.79	0.64	1.00	1.00	0.81	0.67	1.00	1.00	0.83	0.69	1.00	1.00	0.86	0.71	1.00	1.00	1.00	0.76
		Δ T	32	30	26	23	32	30	26	23	32	30	27	23	32	30	26	23	32	30	26	23	33	31	27	24
		kW	1.57	1.57	1.57	1.58	1.77	1.77	1.77	1.78	1.99	1.99	1.99	2.00	2.23	2.23	2.23	2.24	2.50	2.50	2.50	2.51	2.82	2.82	2.81	2.83
		Amps	6.5	6.5	6.4	6.5	7.4	7.4	7.4	7.4	8.4	8.4	8.4	8.4	9.5	9.5	9.5	9.5	10.7	10.7	10.7	10.8	12.2	12.2	12.1	12.2
		HI PR	248	249	251	255	287	288	289	294	327	328	330	334	371	372	374	378	418	419	421	425	468	470	471	476
		LO PR	126	128	131	136	134	135	139	144	140	142	145	150	146	148	151	156	151	153	156	161	158	160	163	168
	975	MBh	30.3	30.8	31.6	33.0	30.1	30.5	31.4	32.7	29.3	29.7	30.6	31.9	28.0	28.4	29.3	30.6	26.4	26.8	27.7	29.0	24.9	25.3	26.2	27.6
		S/T	1.00	0.97	0.83	0.68	1.00	1.00	0.84	0.69	1.00	1.00	0.86	0.71	1.00	1.00	0.88	0.73	1.00	1.00	0.90	0.76	1.00	1.00	1.00	0.81
		Δ T	31	29	26	22	31	29	26	22	31	29	26	22	31	29	26	22	31	29	25	22	32	30	26	23
		kW	1.58	1.58	1.58	1.59	1.78	1.78	1.77	1.79	2.00	2.00	2.00	2.01	2.24	2.24	2.24	2.25	2.51	2.51	2.51	2.52	2.83	2.82	2.82	2.84
		Amps	6.5	6.5	6.5	6.6	7.4	7.4	7.4	7.5	8.4	8.4	8.4	8.5	9.5	9.5	9.5	9.6	10.8	10.8	10.7	10.8	12.2	12.2	12.2	12.3
		HI PR	250	251	252	257	288	289	291	295	329	330	332	336	373	374	375	380	420	421	423	427	470	471	473	477
		LO PR	128	129	133	138	135	137	140	145	142	143	147	152	148	149	152	157	153	155	158	163	160	161	164	170
	1125	MBh	30.9	31.3	32.2	33.6	30.7	31.1	32.0	33.3	29.9	30.3	31.2	32.5	28.6	29.0	29.9	31.2	27.0	27.4	28.3	29.6	25.5	25.9	26.8	28.1
		S/T	1.00	1.00	0.87	0.72	1.00	1.00	0.87	0.73	1.00	1.00	0.90	0.75	1.00	1.00	0.92	0.77	1.00	1.00	1.00	0.80	1.00	1.00	1.00	0.85
		Δ T	30	28	24	21	30	28	24	21	30	28	25	21	30	28	24	21	29	28	24	21	31	29	25	22
		kW	1.59	1.59	1.59	1.60	1.79	1.79	1.79	1.80	2.01	2.01	2.01	2.02	2.25	2.25	2.25	2.26	2.52	2.52	2.52	2.53	2.84	2.83	2.83	2.85
		Amps	6.6	6.6	6.5	6.6	7.5	7.5	7.4	7.5	8.5	8.5	8.5	8.5	9.6	9.6	9.6	9.6	10.8	10.8	10.8	10.9	12.3	12.3	12.2	12.3
		HI PR	252	253	255	259	291	292	294	298	331	333	334	339	375	376	378	382	422	423	425	429	473	474	475	480
		LO PR	130	132	135	140	138	139	143	148	144	146	149	154	150	152	155	160	155	157	160	165	162	164	167	172

IDB: Entering Indoor Dry Bulb Temperature

Shaded area reflects AHRI Rating Conditions.

kW = Total system power

High and low pressures are measured at the liquid and suction service valves.

Amps = Outdoor unit amps (compressor + fan)

Cooling Data — DZ16SA0361B*+ ASPT37C14A* + TXV

			Outdoor Ambient Temperature																							
			65ºF				75ºF				85ºF				95ºF				105ºF				115ºF			
			Entering Indoor Wet Bulb Temperature																							
IDB	Airflow		59	63	67	71	59	63	67	71	59	63	67	71	59	63	67	71	59	63	67	71	59	63	67	71
70	1050	MBh	35.3	35.7	36.8	-	34.9	35.4	36.5	-	34.0	34.5	35.6	-	32.5	33.0	34.0	-	30.6	31.0	32.1	-	28.8	29.3	30.3	-
		S/T	0.66	0.59	0.45	-	0.67	0.59	0.46	-	0.69	0.62	0.48	-	1.00	0.64	0.50	-	1.00	0.66	0.52	-	1.00	0.71	0.58	-
		Δ T	19	17	14	-	19	17	14	-	20	18	14	-	19	17	14	-	19	17	14	-	20	18	15	-
		kW	1.89	1.88	1.88	-	2.12	2.12	2.11	-	2.38	2.38	2.37	-	2.66	2.66	2.65	-	2.97	2.97	2.97	-	3.34	3.34	3.33	-
		Amps	7.7	7.7	7.7	-	8.8	8.8	8.7	-	10.0	10.0	9.9	-	11.2	11.2	11.2	-	12.7	12.7	12.7	-	14.4	14.4	14.3	-
		HI PR	248	249	251	-	287	288	290	-	328	329	331	-	372	373	374	-	419	420	422	-	469	470	472	-
		LO PR	124	125	128	-	131	133	136	-	138	139	142	-	143	145	148	-	149	150	153	-	155	157	160	-
	1200	MBh	35.9	36.4	37.4	-	35.6	36.1	37.1	-	34.7	35.2	36.2	-	33.1	33.6	34.6	-	31.2	31.7	32.7	-	29.4	29.9	31.0	-
		S/T	0.70	0.62	0.49	-	0.71	0.63	0.50	-	0.73	0.66	0.52	-	1.00	0.67	0.54	-	1.00	0.70	0.56	-	1.00	0.75	0.61	-
		Δ T	18	16	13	-	18	16	13	-	18	17	13	-	18	16	13	-	18	16	12	-	19	17	14	-
		kW	1.90	1.89	1.89	-	2.13	2.13	2.12	-	2.39	2.39	2.38	-	2.67	2.67	2.66	-	2.98	2.98	2.98	-	3.35	3.35	3.35	-
		Amps	7.8	7.8	7.7	-	8.8	8.8	8.8	-	10.0	10.0	10.0	-	11.3	11.3	11.3	-	12.7	12.7	12.7	-	14.4	14.4	14.4	-
		HI PR	251	252	253	-	289	290	292	-	330	331	333	-	374	375	377	-	421	422	424	-	472	473	474	-
		LO PR	126	128	131	-	133	135	138	-	140	141	145	-	145	147	150	-	151	152	155	-	158	159	162	-
	1350	MBh	36.7	37.2	38.2	-	36.4	36.9	37.9	-	35.5	35.9	37.0	-	33.9	34.4	35.4	-	32.0	32.5	33.5	-	30.2	30.7	31.8	-
		S/T	0.71	0.63	0.50	-	0.71	0.64	0.50	-	0.74	0.66	0.53	-	1.00	0.68	0.55	-	1.00	0.70	0.57	-	1.00	0.76	0.62	-
		Δ T	17	15	12	-	17	15	12	-	17	16	12	-	17	15	12	-	17	15	12	-	18	16	13	-
		kW	1.91	1.90	1.90	-	2.14	2.14	2.13	-	2.40	2.40	2.39	-	2.68	2.68	2.67	-	2.99	2.99	2.99	-	3.36	3.36	3.36	-
		Amps	7.8	7.8	7.8	-	8.9	8.9	8.8	-	10.1	10.0	10.0	-	11.3	11.3	11.3	-	12.8	12.8	12.8	-	14.5	14.5	14.4	-
		HI PR	253	254	256	-	292	293	295	-	332	334	335	-	376	377	379	-	424	425	426	-	474	475	477	-
		LO PR	129	130	133	-	136	138	141	-	143	144	147	-	148	150	153	-	153	155	158	-	160	162	165	-
75	1050	MBh	35.3	35.8	36.8	38.4	35.0	35.5	36.5	38.1	34.1	34.5	35.6	37.2	32.5	**33.0**	34.0	35.6	30.6	31.1	32.1	33.7	28.8	29.3	30.4	32.0
		S/T	0.79	0.72	0.58	0.44	0.80	0.72	0.59	0.44	1.00	0.75	0.61	0.47	1.00	**0.77**	0.63	0.49	1.00	0.79	0.65	0.51	1.00	1.00	0.70	0.56
		Δ T	23	22	18	14	23	22	18	14	24	22	18	15	23	**21**	18	14	23	21	18	14	24	22	19	15
		kW	1.88	1.88	1.88	1.90	2.12	2.11	2.11	2.13	2.38	2.37	2.37	2.39	2.66	**2.65**	2.65	2.67	2.97	2.97	2.96	2.98	3.34	3.34	3.33	3.35
		Amps	7.7	7.7	7.7	7.8	8.8	8.8	8.7	8.8	10.0	9.9	9.9	10.0	11.2	**11.2**	11.2	11.3	12.7	12.7	12.6	12.7	14.4	14.3	14.3	14.4
		HI PR	248	250	251	256	287	288	290	294	328	329	331	335	372	**373**	375	379	419	420	422	426	469	471	472	477
		LO PR	124	125	128	134	131	133	136	141	138	139	142	147	143	**145**	148	153	149	150	153	158	155	157	160	165
	1200	MBh	35.9	36.4	37.4	39.0	35.6	36.1	37.1	38.7	34.7	35.2	36.2	37.8	33.1	33.6	34.7	36.2	31.2	31.7	32.7	34.3	29.5	30.0	31.0	32.6
		S/T	0.83	0.75	0.62	0.48	1.00	0.76	0.62	0.48	1.00	0.78	0.65	0.51	1.00	0.80	0.67	0.53	1.00	0.83	0.69	0.55	1.00	1.00	0.74	0.60
		Δ T	22	20	17	13	22	20	17	13	23	21	17	14	22	20	17	13	22	20	17	13	23	21	18	14
		kW	1.90	1.89	1.89	1.91	2.13	2.13	2.12	2.14	2.39	2.39	2.38	2.40	2.67	2.67	2.66	2.68	2.98	2.98	2.98	2.99	3.35	3.35	3.34	3.36
		Amps	7.8	7.7	7.7	7.8	8.8	8.8	8.8	8.9	10.0	10.0	10.0	10.1	11.3	11.3	11.3	11.3	12.7	12.7	12.7	12.8	14.4	14.4	14.4	14.5
		HI PR	251	252	254	258	290	291	292	297	330	331	333	337	374	375	377	381	421	422	424	428	472	473	475	479
		LO PR	126	128	131	136	133	135	138	143	140	141	145	150	145	147	150	155	151	152	155	161	158	159	162	167
	1350	MBh	36.7	37.2	38.2	39.8	36.4	36.9	37.9	39.5	35.5	36.0	37.0	38.6	33.9	34.4	35.4	37.0	32.0	32.5	33.5	35.1	30.3	30.7	31.8	33.4
		S/T	0.84	0.76	0.63	0.48	1.00	0.77	0.63	0.49	1.00	0.79	0.66	0.51	1.00	0.81	0.68	0.53	1.00	1.00	0.70	0.56	1.00	1.00	0.75	0.61
		Δ T	21	20	16	12	21	19	16	12	22	20	16	13	21	19	16	12	21	19	16	12	22	20	17	13
		kW	1.91	1.90	1.90	1.92	2.14	2.14	2.13	2.15	2.40	2.40	2.39	2.41	2.68	2.68	2.67	2.69	2.99	2.99	2.99	3.00	3.36	3.36	3.35	3.37
		Amps	7.8	7.8	7.8	7.9	8.9	8.9	8.8	8.9	10.1	10.0	10.0	10.1	11.3	11.3	11.3	11.4	12.8	12.8	12.7	12.8	14.5	14.4	14.4	14.5
		HI PR	253	254	256	260	292	293	295	299	333	334	335	340	377	378	379	384	424	425	427	431	474	475	477	481
		LO PR	129	130	133	138	136	138	141	146	143	144	147	152	148	150	153	158	153	155	158	163	160	162	165	170

IDB: Entering Indoor Dry Bulb Temperature

Shaded area reflects ACCA (TVA) Rating Conditions.

kW = Total system power

High and low pressures are measured at the liquid and suction service valves.

Amps = Outdoor unit amps (compressor + fan)

			Outdoor Ambient Temperature																							
			65ºF				75ºF				85ºF				95ºF				105ºF				115ºF			
			Entering Indoor Wet Bulb Temperature																							
IDB	Airflow		59	63	67	71	59	63	67	71	59	63	67	71	59	63	67	71	59	63	67	71	59	63	67	71
80	1050	MBh	35.5	35.9	37.0	38.6	35.1	35.6	36.7	38.3	34.2	34.7	35.8	37.4	32.7	33.2	**34.2**	35.8	30.8	31.2	32.3	33.9	29.0	29.5	30.5	32.1
		S/T	1.00	0.84	0.71	0.56	1.00	0.85	0.71	0.57	1.00	0.87	0.74	0.59	1.00	0.89	**0.76**	0.61	1.00	1.00	0.78	0.64	1.00	1.00	0.83	0.69
		Δ T	28	26	22	19	28	26	22	19	28	26	22	19	28	26	**22**	18	27	25	22	18	29	27	23	19
		kW	1.88	1.88	1.88	1.90	2.12	2.12	2.11	2.13	2.38	2.37	2.37	2.39	2.66	2.66	**2.65**	2.67	2.97	2.97	2.97	2.98	3.34	3.34	3.33	3.35
		Amps	7.7	7.7	7.7	7.8	8.8	8.8	8.7	8.8	10.0	9.9	9.9	10.0	11.2	11.2	**11.2**	11.3	12.7	12.7	12.7	12.7	14.4	14.4	14.3	14.4
		HI PR	249	250	252	256	288	289	291	295	328	329	331	336	372	373	**375**	379	419	421	422	427	470	471	473	477
		LO PR	124	126	129	134	132	133	136	142	138	140	143	148	144	145	**148**	153	149	151	154	159	156	157	160	166
	1200	MBh	36.1	36.6	37.6	39.2	35.8	36.3	37.3	38.9	34.9	35.4	36.4	38.0	33.3	33.8	34.8	36.4	31.4	31.9	32.9	34.5	29.7	30.1	31.2	32.8
		S/T	1.00	0.88	0.74	0.60	1.00	0.88	0.75	0.61	1.00	0.91	0.77	0.63	1.00	1.00	0.79	0.65	1.00	1.00	0.81	0.67	1.00	1.00	0.87	0.72
		Δ T	27	25	21	17	26	25	21	17	27	25	21	18	26	25	21	17	26	24	21	17	27	26	22	18
		kW	1.90	1.89	1.89	1.91	2.13	2.13	2.12	2.14	2.39	2.39	2.38	2.40	2.67	2.67	2.66	2.68	2.98	2.98	2.98	2.99	3.35	3.35	3.34	3.36
		Amps	7.8	7.8	7.7	7.8	8.8	8.8	8.8	8.9	10.0	10.0	10.0	10.1	11.3	11.3	11.3	11.3	12.7	12.7	12.7	12.8	14.4	14.4	14.4	14.5
		HI PR	251	252	254	258	290	291	293	297	331	332	334	338	375	376	377	382	422	423	425	429	472	473	475	479
		LO PR	127	128	131	136	134	135	139	144	140	142	145	150	146	147	151	156	151	153	156	161	158	160	163	168
	1350	MBh	36.9	37.4	38.4	40.0	36.6	37.1	38.1	39.7	35.7	36.1	37.2	38.8	34.1	34.6	35.6	37.2	32.2	32.7	33.7	35.3	30.4	30.9	32.0	33.6
		S/T	1.00	0.89	0.75	0.61	1.00	0.89	0.76	0.61	1.00	0.92	0.78	0.64	1.00	1.00	0.80	0.66	1.00	1.00	0.82	0.68	1.00	1.00	0.87	0.73
		Δ T	26	24	20	17	26	24	20	16	26	24	20	17	26	24	20	16	25	23	20	16	26	25	21	17
		kW	1.91	1.90	1.90	1.92	2.14	2.14	2.13	2.15	2.40	2.40	2.39	2.41	2.68	2.68	2.67	2.69	2.99	2.99	2.99	3.00	3.36	3.36	3.35	3.37
		Amps	7.8	7.8	7.8	7.9	8.9	8.9	8.8	8.9	10.1	10.0	10.0	10.1	11.3	11.3	11.3	11.4	12.8	12.8	12.8	12.8	14.5	14.5	14.4	14.5
		HI PR	254	255	256	261	292	294	295	300	333	334	336	340	377	378	380	384	424	425	427	431	475	476	477	482
		LO PR	129	131	134	139	137	138	141	146	143	145	148	153	149	150	153	158	154	156	159	164	161	162	165	171
85	1050	MBh	36.0	36.5	37.6	39.2	35.7	36.2	37.3	38.8	34.8	35.3	36.3	37.9	33.3	33.7	34.8	36.4	31.3	31.8	32.9	34.5	29.6	30.1	31.1	32.7
		S/T	1.00	0.94	0.81	0.66	1.00	0.95	0.81	0.67	1.00	1.00	0.84	0.70	1.00	1.00	0.86	0.71	1.00	1.00	0.88	0.74	1.00	1.00	1.00	0.79
		Δ T	31	29	26	22	31	29	26	22	32	30	26	22	31	29	26	22	31	29	26	22	32	30	27	23
		kW	1.89	1.89	1.88	1.90	2.12	2.12	2.12	2.13	2.38	2.38	2.38	2.39	2.66	2.66	2.66	2.67	2.98	2.97	2.97	2.99	3.34	3.34	3.34	3.36
		Amps	7.7	7.7	7.7	7.8	8.8	8.8	8.8	8.8	10.0	10.0	10.0	10.0	11.3	11.3	11.2	11.3	12.7	12.7	12.7	12.8	14.4	14.4	14.4	14.4
		HI PR	250	251	253	257	289	290	292	296	330	331	332	337	373	374	376	380	421	422	423	428	471	472	474	478
		LO PR	126	128	131	136	134	135	138	143	140	142	145	150	146	147	150	155	151	152	156	161	158	159	162	167
	1200	MBh	36.7	37.2	38.2	39.8	36.4	36.9	37.9	39.5	35.5	35.9	37.0	38.6	33.9	34.4	35.4	37.0	32.0	32.5	33.5	35.1	30.2	30.7	31.8	33.4
		S/T	1.00	0.98	0.84	0.70	1.00	1.00	0.85	0.71	1.00	1.00	0.87	0.73	1.00	1.00	0.89	0.75	1.00	1.00	0.92	0.77	1.00	1.00	1.00	0.82
		Δ T	30	28	25	21	30	28	25	21	30	29	25	21	30	28	25	21	30	28	25	21	31	29	26	22
		kW	1.90	1.90	1.89	1.91	2.13	2.13	2.13	2.15	2.39	2.39	2.39	2.40	2.67	2.67	2.67	2.69	2.99	2.99	2.98	3.00	3.36	3.35	3.35	3.37
		Amps	7.8	7.8	7.8	7.8	8.8	8.8	8.8	8.9	10.0	10.0	10.0	10.1	11.3	11.3	11.3	11.4	12.8	12.7	12.7	12.8	14.4	14.4	14.4	14.5
		HI PR	252	253	255	259	291	292	294	298	332	333	335	339	376	377	379	383	423	424	426	430	473	474	476	480
		LO PR	128	130	133	138	136	137	140	146	142	144	147	152	148	149	152	158	153	155	158	163	160	161	165	170
	1350	MBh	37.5	37.9	39.0	40.6	37.1	37.6	38.7	40.3	36.2	36.7	37.8	39.4	34.7	35.2	36.2	37.8	32.8	33.3	34.3	35.9	31.0	31.5	32.6	34.1
		S/T	1.00	0.99	0.85	0.71	1.00	1.00	0.86	0.71	1.00	1.00	0.88	0.74	1.00	1.00	0.90	0.76	1.00	1.00	1.00	0.78	1.00	1.00	1.00	0.83
		Δ T	29	27	24	20	29	27	24	20	30	28	24	20	29	27	24	20	29	27	24	20	30	28	25	21
		kW	1.91	1.91	1.90	1.92	2.14	2.14	2.14	2.16	2.40	2.40	2.40	2.41	2.68	2.68	2.68	2.70	3.00	3.00	2.99	3.01	3.37	3.36	3.36	3.38
		Amps	7.8	7.8	7.8	7.9	8.9	8.9	8.9	8.9	10.1	10.1	10.0	10.1	11.4	11.4	11.3	11.4	12.8	12.8	12.8	12.9	14.5	14.5	14.5	14.5
		HI PR	255	256	258	262	294	295	296	301	334	335	337	341	378	379	381	385	425	426	428	432	476	477	479	483
		LO PR	131	133	136	141	138	140	143	148	145	146	150	155	150	152	155	160	156	157	160	166	163	164	167	172

IDB: Entering Indoor Dry Bulb Temperature

Shaded area reflects AHRI Rating Conditions.

kW = Total system power

High and low pressures are measured at the liquid and suction service valves.

Amps = Outdoor unit amps (compressor + fan)

Cooling Data — DZ16SA0421B* + ASPT47D14A* + TXV

			Outdoor Ambient Temperature																							
			65ºF				75ºF				85ºF				95ºF				105ºF				115ºF			
			Entering Indoor Wet Bulb Temperature																							
IDB	Airflow		59	63	67	71	59	63	67	71	59	63	67	71	59	63	67	71	59	63	67	71	59	63	67	71
70	1140	MBh	40.2	40.8	41.9	-	39.8	40.4	41.6	-	38.8	39.4	40.6	-	37.0	37.6	38.8	-	34.8	35.4	36.6	-	32.9	33.4	34.6	-
		S/T	0.64	0.57	0.44	-	0.65	0.58	0.44	-	0.67	0.60	0.47	-	0.69	0.62	0.49	-	1.00	0.64	0.51	-	1.00	0.69	0.56	-
		Δ T	20	18	14	-	20	18	14	-	20	18	15	-	20	18	14	-	20	18	14	-	21	19	15	-
		kW	2.13	2.13	2.13	-	2.40	2.40	2.40	-	2.71	2.70	2.70	-	3.03	3.03	3.02	-	3.40	3.39	3.39	-	3.82	3.82	3.82	-
		Amps	8.5	8.5	8.5	-	9.7	9.7	9.7	-	11.1	11.1	11.1	-	12.6	12.6	12.6	-	14.3	14.3	14.2	-	16.2	16.2	16.2	-
		HI PR	247	248	249	-	285	286	288	-	326	327	329	-	369	370	372	-	416	417	419	-	466	467	469	-
		LO PR	121	123	126	-	129	130	133	-	135	136	140	-	140	142	145	-	146	147	150	-	152	154	157	-
	1400	MBh	41.4	42.0	43.2	-	41.1	41.6	42.8	-	40.0	40.6	41.8	-	38.3	38.8	40.0	-	36.1	36.6	37.8	-	34.1	34.7	35.8	-
		S/T	0.69	0.61	0.48	-	0.69	0.62	0.49	-	0.72	0.64	0.51	-	1.00	0.66	0.53	-	1.00	0.68	0.55	-	1.00	0.73	0.60	-
		Δ T	18	16	13	-	18	16	13	-	19	17	13	-	18	16	13	-	18	16	12	-	19	17	14	-
		kW	2.15	2.15	2.15	-	2.42	2.42	2.42	-	2.73	2.72	2.72	-	3.05	3.05	3.05	-	3.42	3.41	3.41	-	3.84	3.84	3.84	-
		Amps	8.6	8.6	8.6	-	9.8	9.8	9.8	-	11.2	11.2	11.2	-	12.7	12.7	12.7	-	14.4	14.3	14.3	-	16.3	16.3	16.3	-
		HI PR	250	251	253	-	289	290	292	-	329	331	332	-	373	374	376	-	420	421	423	-	470	471	473	-
		LO PR	125	127	130	-	132	134	137	-	139	140	143	-	144	146	149	-	149	151	154	-	156	158	161	-
	1575	MBh	42.5	43.1	44.3	-	42.2	42.7	43.9	-	41.1	41.7	42.9	-	39.4	39.9	41.1	-	37.2	37.7	38.9	-	35.2	35.7	36.9	-
		S/T	0.68	0.60	0.47	-	0.68	0.61	0.48	-	0.71	0.63	0.50	-	1.00	0.65	0.52	-	1.00	0.67	0.54	-	1.00	0.72	0.59	-
		Δ T	17	15	12	-	17	15	12	-	18	16	12	-	17	15	12	-	17	15	11	-	18	16	13	-
		kW	2.17	2.16	2.16	-	2.44	2.43	2.43	-	2.74	2.74	2.73	-	3.06	3.06	3.06	-	3.43	3.43	3.42	-	3.86	3.85	3.85	-
		Amps	8.6	8.6	8.6	-	9.9	9.9	9.8	-	11.3	11.2	11.2	-	12.7	12.7	12.7	-	14.4	14.4	14.4	-	16.4	16.4	16.3	-
		HI PR	253	254	256	-	292	293	294	-	332	333	335	-	376	377	378	-	423	424	425	-	473	474	476	-
		LO PR	128	130	133	-	135	137	140	-	142	143	146	-	147	149	152	-	153	154	157	-	159	161	164	-
75	1140	MBh	40.2	40.8	42.0	43.8	39.9	40.4	41.6	43.4	38.8	39.4	40.6	42.4	37.0	**37.6**	38.8	40.6	34.9	35.4	36.6	38.4	32.9	33.4	34.6	36.4
		S/T	0.77	0.69	0.56	0.43	0.77	0.70	0.57	0.43	1.00	0.72	0.59	0.46	1.00	**0.74**	0.61	0.47	1.00	0.76	0.63	0.50	1.00	0.81	0.68	0.55
		Δ T	24	22	19	15	24	22	19	15	25	23	19	15	24	**22**	19	15	24	22	18	15	25	23	20	16
		kW	2.13	2.13	2.13	2.15	2.40	2.40	2.40	2.42	2.70	2.70	2.70	2.72	3.03	**3.03**	3.02	3.04	3.39	3.39	3.39	3.41	3.82	3.82	3.82	3.84
		Amps	8.5	8.5	8.4	8.5	9.7	9.7	9.7	9.8	11.1	11.1	11.1	11.2	12.6	**12.6**	12.6	12.7	14.3	14.2	14.2	14.3	16.2	16.2	16.2	16.3
		HI PR	247	248	250	254	286	287	288	293	326	327	329	333	369	**371**	372	377	416	417	419	423	467	468	469	474
		LO PR	121	123	126	131	129	130	133	138	135	136	140	145	140	**142**	145	150	146	147	150	155	152	154	157	162
	1400	MBh	41.5	42.0	43.2	45.0	41.1	41.7	42.8	44.7	40.1	40.6	41.8	43.6	38.3	38.8	40.0	41.8	36.1	36.7	37.9	39.7	34.1	34.7	35.9	37.7
		S/T	0.81	0.74	0.61	0.47	0.82	0.74	0.61	0.47	1.00	0.77	0.64	0.50	1.00	0.79	0.66	0.52	1.00	0.81	0.68	0.54	1.00	1.00	0.73	0.59
		Δ T	23	21	17	13	23	21	17	13	23	21	17	13	23	21	17	13	22	20	17	13	24	22	18	14
		kW	2.15	2.15	2.15	2.17	2.42	2.42	2.42	2.44	2.72	2.72	2.72	2.74	3.05	3.05	3.04	3.06	3.41	3.41	3.41	3.43	3.84	3.84	3.84	3.86
		Amps	8.6	8.6	8.5	8.6	9.8	9.8	9.8	9.9	11.2	11.2	11.2	11.3	12.7	12.7	12.7	12.7	14.4	14.3	14.3	14.4	16.3	16.3	16.3	16.4
		HI PR	251	252	253	258	289	290	292	296	330	331	332	337	373	374	376	380	420	421	423	427	470	471	473	477
		LO PR	125	127	130	135	132	134	137	142	139	140	143	148	144	146	149	154	149	151	154	159	156	158	161	166
	1575	MBh	42.5	43.1	44.3	46.1	42.2	42.8	43.9	45.8	41.2	41.7	42.9	44.7	39.4	39.9	41.1	42.9	37.2	37.8	38.9	40.8	35.2	35.8	37.0	38.8
		S/T	0.80	0.73	0.60	0.46	1.00	0.73	0.60	0.46	1.00	0.76	0.63	0.49	1.00	0.78	0.65	0.51	1.00	0.80	0.67	0.53	1.00	1.00	0.72	0.58
		Δ T	22	20	16	12	22	20	16	12	22	20	16	12	22	20	16	12	21	19	16	12	23	21	17	13
		kW	2.16	2.16	2.16	2.18	2.43	2.43	2.43	2.45	2.74	2.73	2.73	2.75	3.06	3.06	3.06	3.08	3.43	3.42	3.42	3.44	3.85	3.85	3.85	3.87
		Amps	8.6	8.6	8.6	8.7	9.9	9.9	9.8	9.9	11.2	11.2	11.2	11.3	12.7	12.7	12.7	12.8	14.4	14.4	14.4	14.5	16.4	16.4	16.3	16.4
		HI PR	253	254	256	260	292	293	295	299	332	333	335	339	376	377	379	383	423	424	426	430	473	474	476	480
		LO PR	128	130	133	138	136	137	140	145	142	143	146	152	147	149	152	157	153	154	157	162	159	161	164	169

IDB: Entering Indoor Dry Bulb Temperature

Shaded area reflects ACCA (TVA) Rating Conditions.

kW = Total system power

High and low pressures are measured at the liquid and suction service valves.

Amps = Outdoor unit amps (compressor + fan)

Cooling Data — DZ16SA0421B* + ASPT47D14A* + TXV (cont.)

			Outdoor Ambient Temperature																							
			65ºF				75ºF				85ºF				95ºF				105ºF				115ºF			
			Entering Indoor Wet Bulb Temperature																							
IDB	Airflow		59	63	67	71	59	63	67	71	59	63	67	71	59	63	67	71	59	63	67	71	59	63	67	71
80	1140	MBh	40.4	41.0	42.2	44.0	40.1	40.6	41.8	43.6	39.0	39.6	40.8	42.6	37.3	37.8	**39.0**	40.8	35.1	35.6	36.8	38.6	33.1	33.6	34.8	36.6
		S/T	0.89	0.82	0.68	0.55	1.00	0.82	0.69	0.55	1.00	0.85	0.71	0.58	1.00	0.86	**0.73**	0.60	1.00	1.00	0.75	0.62	1.00	1.00	0.80	0.67
		Δ T	29	27	23	19	29	27	23	19	29	27	23	20	29	27	**23**	19	28	27	23	19	30	28	24	20
		kW	2.13	2.13	2.13	2.15	2.40	2.40	2.40	2.42	2.70	2.70	2.70	2.72	3.03	3.03	**3.02**	3.05	3.40	3.39	3.39	3.41	3.82	3.82	3.82	3.84
		Amps	8.5	8.5	8.5	8.6	9.7	9.7	9.7	9.8	11.1	11.1	11.1	11.2	12.6	12.6	**12.6**	12.7	14.3	14.3	14.2	14.3	16.2	16.2	16.2	16.3
		HI PR	247	248	250	254	286	287	289	293	326	327	329	333	370	371	**373**	377	417	418	420	424	467	468	470	474
		LO PR	122	123	126	132	129	131	134	139	136	137	140	145	141	142	**145**	151	146	148	151	156	153	154	157	162
	1400	MBh	41.7	42.2	43.4	45.2	41.3	41.9	43.1	44.9	40.3	40.8	42.0	43.8	38.5	39.1	40.2	42.0	36.3	36.9	38.1	39.9	34.3	34.9	36.1	37.9
		S/T	1.00	0.86	0.73	0.59	1.00	0.86	0.73	0.60	1.00	0.89	0.76	0.62	1.00	1.00	0.78	0.64	1.00	1.00	0.80	0.66	1.00	1.00	0.85	0.71
		Δ T	27	25	21	18	27	25	21	18	27	25	22	18	27	25	21	18	27	25	21	17	28	26	22	19
		kW	2.15	2.15	2.15	2.17	2.42	2.42	2.42	2.44	2.73	2.72	2.72	2.74	3.05	3.05	3.04	3.07	3.42	3.41	3.41	3.43	3.84	3.84	3.84	3.86
		Amps	8.6	8.6	8.5	8.6	9.8	9.8	9.8	9.9	11.2	11.2	11.2	11.3	12.7	12.7	12.7	12.8	14.4	14.3	14.3	14.4	16.3	16.3	16.3	16.4
		HI PR	251	252	254	258	290	291	292	297	330	331	333	337	374	375	376	381	421	422	423	428	471	472	473	478
		LO PR	126	127	130	135	133	134	137	143	139	141	144	149	145	146	149	154	150	151	155	160	157	158	161	166
	1575	MBh	42.8	43.3	44.5	46.3	42.4	43.0	44.1	46.0	41.4	41.9	43.1	44.9	39.6	40.1	41.3	43.1	37.4	38.0	39.1	41.0	35.4	36.0	37.2	39.0
		S/T	1.00	0.85	0.72	0.58	1.00	0.85	0.72	0.59	1.00	0.88	0.75	0.61	1.00	1.00	0.77	0.63	1.00	1.00	0.79	0.65	1.00	1.00	0.84	0.70
		Δ T	26	24	20	17	26	24	20	17	26	24	21	17	26	24	20	17	26	24	20	16	27	25	21	18
		kW	2.17	2.16	2.16	2.18	2.44	2.43	2.43	2.45	2.74	2.73	2.73	2.75	3.06	3.06	3.06	3.08	3.43	3.43	3.42	3.44	3.86	3.85	3.85	3.87
		Amps	8.6	8.6	8.6	8.7	9.9	9.9	9.8	9.9	11.2	11.2	11.2	11.3	12.7	12.7	12.7	12.8	14.4	14.4	14.4	14.5	16.4	16.4	16.3	16.4
		HI PR	254	255	257	261	292	293	295	299	333	334	336	340	376	377	379	383	423	424	426	430	473	474	476	480
		LO PR	129	130	133	138	136	138	141	146	142	144	147	152	148	149	152	157	153	155	158	163	160	161	164	169
85	1140	MBh	41.1	41.7	42.8	44.7	40.7	41.3	42.5	44.3	39.7	40.3	41.5	43.3	37.9	38.5	39.7	41.5	35.7	36.3	37.5	39.3	33.8	34.3	35.5	37.3
		S/T	1.00	0.91	0.78	0.64	1.00	0.92	0.79	0.65	1.00	1.00	0.81	0.67	1.00	1.00	0.83	0.69	1.00	1.00	0.85	0.71	1.00	1.00	1.00	0.76
		Δ T	33	31	27	23	33	31	27	23	33	31	27	23	33	31	27	23	32	30	27	23	34	32	28	24
		kW	2.14	2.14	2.13	2.15	2.41	2.41	2.40	2.42	2.71	2.71	2.70	2.72	3.04	3.03	3.03	3.05	3.40	3.40	3.39	3.41	3.83	3.83	3.82	3.84
		Amps	8.5	8.5	8.5	8.6	9.7	9.7	9.7	9.8	11.1	11.1	11.1	11.2	12.6	12.6	12.6	12.7	14.3	14.3	14.3	14.4	16.2	16.2	16.2	16.3
		HI PR	249	250	251	256	287	288	290	294	328	329	330	335	371	372	374	378	418	419	421	425	468	469	471	475
		LO PR	124	125	128	133	131	132	135	141	137	139	142	147	143	144	147	152	148	149	153	158	155	156	159	164
	1400	MBh	42.3	42.9	44.1	45.9	42.0	42.5	43.7	45.5	40.9	41.5	42.7	44.5	39.2	39.7	40.9	42.7	37.0	37.5	38.7	40.5	35.0	35.6	36.7	38.5
		S/T	1.00	0.96	0.83	0.69	1.00	1.00	0.83	0.69	1.00	1.00	0.86	0.72	1.00	1.00	0.87	0.74	1.00	1.00	0.90	0.76	1.00	1.00	1.00	0.81
		Δ T	31	29	25	21	31	29	25	21	31	29	26	22	31	29	25	21	31	29	25	21	32	30	26	22
		kW	2.16	2.16	2.15	2.17	2.43	2.43	2.42	2.44	2.73	2.73	2.72	2.74	3.06	3.05	3.05	3.07	3.42	3.42	3.41	3.44	3.85	3.85	3.84	3.86
		Amps	8.6	8.6	8.6	8.7	9.8	9.8	9.8	9.9	11.2	11.2	11.2	11.3	12.7	12.7	12.7	12.8	14.4	14.4	14.3	14.4	16.3	16.3	16.3	16.4
		HI PR	252	253	255	259	291	292	294	298	331	332	334	338	375	376	378	382	422	423	425	429	472	473	475	479
		LO PR	127	129	132	137	135	136	139	144	141	143	146	151	146	148	151	156	152	153	156	161	158	160	163	168
	1575	MBh	43.4	44.0	45.2	47.0	43.1	43.6	44.8	46.6	42.0	42.6	43.8	45.6	40.2	40.8	42.0	43.8	38.1	38.6	39.8	41.6	36.1	36.6	37.8	39.6
		S/T	1.00	0.95	0.82	0.68	1.00	1.00	0.82	0.68	1.00	1.00	0.85	0.71	1.00	1.00	0.86	0.73	1.00	1.00	1.00	0.75	1.00	1.00	1.00	0.80
		Δ T	30	28	24	20	30	28	24	20	30	28	25	21	30	28	24	20	30	28	24	20	31	29	25	21
		kW	2.17	2.17	2.16	2.18	2.44	2.44	2.43	2.45	2.74	2.74	2.74	2.76	3.07	3.07	3.06	3.08	3.43	3.43	3.43	3.45	3.86	3.86	3.85	3.87
		Amps	8.7	8.6	8.6	8.7	9.9	9.9	9.9	10.0	11.3	11.3	11.2	11.3	12.8	12.8	12.7	12.8	14.4	14.4	14.4	14.5	16.4	16.4	16.4	16.5
		HI PR	255	256	258	262	294	295	296	301	334	335	337	341	378	379	380	385	424	426	427	431	475	476	477	482
		LO PR	131	132	135	140	138	139	142	147	144	146	149	154	150	151	154	159	155	156	159	164	162	163	166	171

IDB: Entering Indoor Dry Bulb Temperature

Shaded area reflects AHRI Rating Conditions.

kW = Total system power

High and low pressures are measured at the liquid and suction service valves.

Amps = Outdoor unit amps (compressor + fan)

Cooling Data — DZ16SA0481B* + ASPT49D14A* + TXV

			Outdoor Ambient Temperature																							
			65ºF				75ºF				85ºF				95ºF				105ºF				115ºF			
			Entering Indoor Wet Bulb Temperature																							
IDB	Airflow		59	63	67	71	59	63	67	71	59	63	67	71	59	63	67	71	59	63	67	71	59	63	67	71
70	1400	MBh	46.4	47.0	48.4	-	46.0	46.6	48.0	-	44.8	45.4	46.8	-	42.7	43.4	44.7	-	40.2	40.9	42.2	-	37.9	38.6	39.9	-
		S/T	0.65	0.58	0.45	-	0.66	0.59	0.45	-	0.69	0.61	0.48	-	0.70	0.63	0.50	-	1.00	0.65	0.52	-	1.00	0.70	0.57	-
		Δ T	19	17	14	-	19	17	14	-	19	18	14	-	19	17	14	-	19	17	13	-	20	18	15	-
		kW	2.47	2.47	2.46	-	2.78	2.77	2.77	-	3.12	3.12	3.12	-	3.50	3.50	3.49	-	3.92	3.91	3.91	-	4.41	4.40	4.40	-
		Amps	10.0	10.0	10.0	-	11.4	11.4	11.4	-	13.0	13.0	13.0	-	14.7	14.7	14.7	-	16.6	16.6	16.6	-	18.9	18.9	18.8	-
		HI PR	246	247	249	-	284	285	287	-	324	326	327	-	368	369	371	-	415	416	417	-	465	466	467	-
		LO PR	121	123	126	-	128	130	133	-	135	136	139	-	140	142	145	-	145	147	150	-	152	153	156	-
	1600	MBh	47.2	47.9	49.2	-	46.8	47.5	48.8	-	45.6	46.3	47.6	-	43.6	44.2	45.6	-	41.0	41.7	43.1	-	38.7	39.4	40.8	-
		S/T	0.69	0.62	0.48	-	0.70	0.62	0.49	-	0.72	0.65	0.51	-	0.74	0.67	0.53	-	1.00	0.69	0.55	-	1.00	0.74	0.60	-
		Δ T	18	16	13	-	18	16	13	-	18	16	13	-	18	16	13	-	18	16	12	-	19	17	14	-
		kW	2.48	2.48	2.47	-	2.79	2.79	2.78	-	3.14	3.14	3.13	-	3.51	3.51	3.51	-	3.93	3.93	3.92	-	4.42	4.42	4.41	-
		Amps	10.1	10.1	10.0	-	11.5	11.5	11.5	-	13.1	13.1	13.0	-	14.8	14.8	14.8	-	16.7	16.7	16.7	-	18.9	18.9	18.9	-
		HI PR	248	249	251	-	287	288	289	-	327	328	330	-	370	371	373	-	417	418	420	-	467	468	470	-
		LO PR	123	125	128	-	131	132	135	-	137	138	141	-	142	144	147	-	148	149	152	-	154	156	159	-
	1800	MBh	48.3	48.9	50.3	-	47.8	48.5	49.9	-	46.6	47.3	48.7	-	44.6	45.2	46.6	-	42.1	42.7	44.1	-	39.8	40.4	41.8	-
		S/T	0.70	0.62	0.49	-	0.70	0.63	0.50	-	0.73	0.65	0.52	-	1.00	0.67	0.54	-	1.00	0.69	0.56	-	1.00	0.75	0.61	-
		Δ T	17	15	12	-	17	15	12	-	17	16	12	-	17	15	12	-	17	15	11	-	18	16	13	-
		kW	2.50	2.49	2.49	-	2.81	2.80	2.80	-	3.15	3.15	3.14	-	3.53	3.52	3.52	-	3.94	3.94	3.94	-	4.44	4.43	4.43	-
		Amps	10.1	10.1	10.1	-	11.6	11.5	11.5	-	13.1	13.1	13.1	-	14.8	14.8	14.8	-	16.8	16.8	16.7	-	19.0	19.0	19.0	-
		HI PR	250	251	253	-	289	290	292	-	329	330	332	-	373	374	375	-	419	420	422	-	469	470	472	-
		LO PR	126	127	130	-	133	135	138	-	140	141	144	-	145	146	149	-	150	152	155	-	157	158	161	-
75	1400	MBh	46.4	47.1	48.4	50.5	46.0	46.6	48.0	50.1	44.8	45.5	46.8	48.9	42.7	**43.4**	44.8	46.9	40.2	40.9	42.2	44.3	37.9	38.6	40.0	42.0
		S/T	0.78	0.71	0.57	0.43	0.79	0.71	0.58	0.44	1.00	0.74	0.60	0.46	1.00	**0.76**	0.62	0.48	1.00	0.78	0.64	0.50	1.00	0.83	0.70	0.55
		Δ T	23	21	18	14	23	21	18	14	24	22	18	15	23	**21**	18	14	23	21	18	14	24	22	19	15
		kW	2.47	2.46	2.46	2.48	2.78	2.77	2.77	2.79	3.12	3.12	3.11	3.14	3.50	**3.49**	3.49	3.51	3.91	3.91	3.91	3.93	4.40	4.40	4.40	4.42
		Amps	10.0	10.0	10.0	10.1	11.4	11.4	11.4	11.5	13.0	13.0	13.0	13.1	14.7	**14.7**	14.7	14.8	16.6	16.6	16.6	16.7	18.9	18.9	18.8	18.9
		HI PR	246	247	249	253	284	285	287	291	325	326	327	332	368	**369**	371	375	415	416	418	422	465	466	468	472
		LO PR	121	123	126	131	128	130	133	138	135	136	139	144	140	**142**	145	150	145	147	150	155	152	153	157	162
	1600	MBh	47.2	47.9	49.3	51.4	46.8	47.5	48.9	50.9	45.6	46.3	47.7	49.7	43.6	44.2	45.6	47.7	41.1	41.7	43.1	45.2	38.8	39.4	40.8	42.9
		S/T	0.82	0.74	0.61	0.47	0.82	0.75	0.62	0.48	1.00	0.77	0.64	0.50	1.00	0.79	0.66	0.52	1.00	0.81	0.68	0.54	1.00	1.00	0.73	0.59
		Δ T	22	20	17	13	22	20	17	13	22	21	17	13	22	20	17	13	22	20	17	13	23	21	18	14
		kW	2.48	2.48	2.47	2.50	2.79	2.79	2.78	2.81	3.14	3.13	3.13	3.15	3.51	3.51	3.50	3.53	3.93	3.93	3.92	3.95	4.42	4.42	4.41	4.44
		Amps	10.1	10.1	10.0	10.1	11.5	11.5	11.4	11.6	13.1	13.1	13.0	13.1	14.8	14.8	14.7	14.9	16.7	16.7	16.7	16.8	18.9	18.9	18.9	19.0
		HI PR	248	249	251	255	287	288	289	294	327	328	330	334	370	371	373	377	417	418	420	424	467	468	470	474
		LO PR	123	125	128	133	131	132	135	140	137	138	141	147	142	144	147	152	148	149	152	157	154	156	159	164
	1800	MBh	48.3	48.9	50.3	52.4	47.9	48.5	49.9	52.0	46.7	47.3	48.7	50.8	44.6	45.3	46.6	48.7	42.1	42.7	44.1	46.2	39.8	40.5	41.8	43.9
		S/T	0.82	0.75	0.62	0.48	1.00	0.76	0.62	0.48	1.00	0.78	0.65	0.51	1.00	0.80	0.67	0.53	1.00	0.82	0.69	0.55	1.00	1.00	0.74	0.60
		Δ T	21	19	16	12	21	19	16	12	22	20	16	12	21	19	16	12	21	19	16	12	22	20	17	13
		kW	2.49	2.49	2.49	2.51	2.80	2.80	2.80	2.82	3.15	3.15	3.14	3.17	3.52	3.52	3.52	3.54	3.94	3.94	3.93	3.96	4.43	4.43	4.43	4.45
		Amps	10.1	10.1	10.1	10.2	11.5	11.5	11.5	11.6	13.1	13.1	13.1	13.2	14.8	14.8	14.8	14.9	16.8	16.7	16.7	16.8	19.0	19.0	19.0	19.1
		HI PR	251	252	253	258	289	290	292	296	329	330	332	336	373	374	376	380	420	421	422	427	469	471	472	476
		LO PR	126	127	130	136	133	135	138	143	140	141	144	149	145	146	149	155	150	152	155	160	157	158	161	166

IDB: Entering Indoor Dry Bulb Temperature

Shaded area reflects ACCA (TVA) Rating Conditions.

kW = Total system power

High and low pressures are measured at the liquid and suction service valves.

Amps = Outdoor unit amps (compressor + fan)

Cooling Data — DZ16SA0481B* + ASPT49D14A* + TXV (cont.)

			Outdoor Ambient Temperature																							
			65ºF				75ºF				85ºF				95ºF				105ºF				115ºF			
			Entering Indoor Wet Bulb Temperature																							
IDB	Airflow		59	63	67	71	59	63	67	71	59	63	67	71	59	63	67	71	59	63	67	71	59	63	67	71
80	1400	MBh	46.6	47.3	48.7	50.8	46.2	46.9	48.3	50.3	45.0	45.7	47.1	49.1	43.0	43.6	**45.0**	47.1	40.5	41.1	42.5	44.6	38.2	38.8	40.2	42.3
		S/T	0.90	0.83	0.70	0.56	1.00	0.84	0.70	0.56	1.00	0.86	0.73	0.59	1.00	0.88	**0.75**	0.61	1.00	1.00	0.77	0.63	1.00	1.00	0.82	0.68
		Δ T	28	26	22	18	27	26	22	18	28	26	22	19	27	26	**22**	18	27	25	22	18	28	26	23	19
		kW	2.47	2.46	2.46	2.48	2.78	2.77	2.77	2.79	3.12	3.12	3.12	3.14	3.50	3.49	**3.49**	3.51	3.92	3.91	3.91	3.93	4.41	4.40	4.40	4.42
		Amps	10.0	10.0	10.0	10.1	11.4	11.4	11.4	11.5	13.0	13.0	13.0	13.1	14.7	14.7	**14.7**	14.8	16.6	16.6	16.6	16.7	18.9	18.9	18.8	18.9
		HI PR	246	247	249	253	285	286	288	292	325	326	328	332	369	370	**371**	376	415	416	418	422	465	466	468	472
		LO PR	122	123	126	131	129	130	133	139	135	137	140	145	141	142	**145**	150	146	147	150	156	153	154	157	162
	1600	MBh	47.5	48.1	49.5	51.6	47.1	47.7	49.1	51.2	45.9	46.5	47.9	50.0	43.8	44.5	45.8	47.9	41.3	42.0	43.3	45.4	39.0	39.7	41.0	43.1
		S/T	1.00	0.87	0.73	0.59	1.00	0.87	0.74	0.60	1.00	0.90	0.76	0.62	1.00	0.92	0.78	0.64	1.00	1.00	0.80	0.66	1.00	1.00	0.85	0.71
		Δ T	26	25	21	17	26	24	21	17	27	25	21	18	26	24	21	17	26	24	21	17	27	25	22	18
		kW	2.48	2.48	2.47	2.50	2.79	2.79	2.78	2.81	3.14	3.14	3.13	3.15	3.51	3.51	3.50	3.53	3.93	3.93	3.92	3.95	4.42	4.42	4.41	4.44
		Amps	10.1	10.1	10.0	10.1	11.5	11.5	11.5	11.6	13.1	13.1	13.0	13.1	14.8	14.8	14.7	14.9	16.7	16.7	16.7	16.8	18.9	18.9	18.9	19.0
		HI PR	249	250	251	256	287	288	290	294	327	329	330	334	371	372	374	378	418	419	420	425	468	469	470	475
		LO PR	124	125	128	133	131	133	136	141	138	139	142	147	143	144	147	152	148	150	153	158	155	156	159	164
	1800	MBh	48.5	49.2	50.5	52.6	48.1	48.8	50.1	52.2	46.9	47.6	48.9	51.0	44.9	45.5	46.9	49.0	42.3	43.0	44.4	46.4	40.0	40.7	42.1	44.1
		S/T	1.00	0.87	0.74	0.60	1.00	0.88	0.75	0.61	1.00	0.90	0.77	0.63	1.00	1.00	0.79	0.65	1.00	1.00	0.81	0.67	1.00	1.00	0.86	0.72
		Δ T	25	24	20	16	25	24	20	16	26	24	20	17	25	24	20	16	25	23	20	16	26	24	21	17
		kW	2.50	2.49	2.49	2.51	2.81	2.80	2.80	2.82	3.15	3.15	3.14	3.17	3.53	3.52	3.52	3.54	3.94	3.94	3.94	3.96	4.43	4.43	4.43	4.45
		Amps	10.1	10.1	10.1	10.2	11.5	11.5	11.5	11.6	13.1	13.1	13.1	13.2	14.8	14.8	14.8	14.9	16.8	16.7	16.7	16.8	19.0	19.0	19.0	19.1
		HI PR	251	252	254	258	290	291	292	297	330	331	333	337	373	374	376	380	420	421	423	427	470	471	473	477
		LO PR	126	128	131	136	134	135	138	143	140	142	145	150	145	147	150	155	151	152	155	160	157	159	162	167
85	1400	MBh	47.4	48.1	49.4	51.5	47.0	47.7	49.0	51.1	45.8	46.5	47.8	49.9	43.8	44.4	45.8	47.9	41.2	41.9	43.3	45.3	38.9	39.6	41.0	43.1
		S/T	1.00	0.93	0.80	0.66	1.00	0.94	0.80	0.66	1.00	1.00	0.83	0.69	1.00	1.00	0.85	0.71	1.00	1.00	0.87	0.73	1.00	1.00	1.00	0.78
		Δ T	31	29	26	22	31	29	26	22	31	30	26	22	31	29	26	22	31	29	25	22	32	30	27	23
		kW	2.47	2.47	2.47	2.49	2.78	2.78	2.78	2.80	3.13	3.13	3.12	3.14	3.50	3.50	3.50	3.52	3.92	3.92	3.91	3.94	4.41	4.41	4.40	4.43
		Amps	10.0	10.0	10.0	10.1	11.4	11.4	11.4	11.5	13.0	13.0	13.0	13.1	14.7	14.7	14.7	14.8	16.7	16.6	16.6	16.7	18.9	18.9	18.9	19.0
		HI PR	248	249	250	255	286	287	289	293	326	327	329	333	370	371	372	377	416	418	419	423	466	467	469	473
		LO PR	123	125	128	133	131	132	135	140	137	139	142	147	142	144	147	152	148	149	152	157	154	156	159	164
	1600	MBh	48.3	48.9	50.3	52.4	47.8	48.5	49.9	51.9	46.7	47.3	48.7	50.8	44.6	45.2	46.6	48.7	42.1	42.7	44.1	46.2	39.8	40.4	41.8	43.9
		S/T	1.00	0.97	0.83	0.69	1.00	0.97	0.84	0.70	1.00	1.00	0.86	0.72	1.00	1.00	0.88	0.74	1.00	1.00	0.90	0.76	1.00	1.00	1.00	0.81
		Δ T	30	28	25	21	30	28	25	21	30	28	25	21	30	28	25	21	30	28	24	21	31	29	26	22
		kW	2.49	2.49	2.48	2.50	2.80	2.80	2.79	2.81	3.14	3.14	3.14	3.16	3.52	3.52	3.51	3.53	3.94	3.93	3.93	3.95	4.43	4.42	4.42	4.44
		Amps	10.1	10.1	10.1	10.2	11.5	11.5	11.5	11.6	13.1	13.1	13.1	13.2	14.8	14.8	14.8	14.9	16.7	16.7	16.7	16.8	19.0	19.0	18.9	19.0
		HI PR	250	251	253	257	288	289	291	295	329	330	331	336	372	373	375	379	419	420	422	426	469	470	471	476
		LO PR	126	127	130	135	133	134	137	143	139	141	144	149	145	146	149	154	150	151	154	160	157	158	161	166
	1800	MBh	49.3	49.9	51.3	53.4	48.9	49.5	50.9	53.0	47.7	48.3	49.7	51.8	45.6	46.3	47.6	49.7	43.1	43.8	45.1	47.2	40.8	41.5	42.8	44.9
		S/T	1.00	0.97	0.84	0.70	1.00	1.00	0.85	0.71	1.00	1.00	0.87	0.73	1.00	1.00	0.89	0.75	1.00	1.00	0.91	0.77	1.00	1.00	1.00	0.82
		Δ T	29	27	24	20	29	27	24	20	29	28	24	20	29	27	24	20	29	27	23	20	30	28	25	21
		kW	2.50	2.50	2.49	2.52	2.81	2.81	2.80	2.83	3.16	3.15	3.15	3.17	3.53	3.53	3.52	3.55	3.95	3.95	3.94	3.97	4.44	4.44	4.43	4.46
		Amps	10.2	10.1	10.1	10.2	11.6	11.6	11.5	11.6	13.2	13.1	13.1	13.2	14.9	14.9	14.8	14.9	16.8	16.8	16.8	16.9	19.0	19.0	19.0	19.1
		HI PR	252	253	255	259	291	292	293	298	331	332	334	338	374	375	377	381	421	422	424	428	471	472	474	478
		LO PR	128	130	133	138	136	137	140	145	142	143	146	151	147	149	152	157	153	154	157	162	159	161	164	169

IDB: Entering Indoor Dry Bulb Temperature

Shaded area reflects AHRI Rating Conditions.

kW = Total system power

High and low pressures are measured at the liquid and suction service valves.

Amps = Outdoor unit amps (compressor + fan)

Cooling Data — DZ16SA0601B* - CAPF4961D6D* + TXV / MBVC2000AA-1A*

			Outdoor Ambient Temperature																							
			65ºF				75ºF				85ºF				95ºF				105ºF				115ºF			
			Entering Indoor Wet Bulb Temperature																							
IDB	Airflow		59	63	67	71	59	63	67	71	59	63	67	71	59	63	67	71	59	63	67	71	59	63	67	71
70	1750	MBh	57.8	58.6	60.3	-	57.3	58.1	59.8	-	55.8	56.6	58.3	-	53.2	54.0	55.7	-	50.0	50.8	52.5	-	47.1	48.0	49.7	-
		S/T	0.64	0.57	0.43	-	0.65	0.57	0.43	-	0.67	0.60	0.46	-	0.69	0.62	0.48	-	1.00	0.64	0.50	-	1.00	0.69	0.55	-
		Δ T	19	17	14	-	19	17	14	-	19	17	14	-	19	17	14	-	19	17	13	-	20	18	15	-
		kW	3.20	3.20	3.19	-	3.61	3.61	3.60	-	4.06	4.06	4.05	-	4.56	4.55	4.55	-	5.10	5.10	5.09	-	5.75	5.75	5.74	-
		Amps	12.5	12.4	12.4	-	14.3	14.3	14.3	-	16.4	16.4	16.4	-	18.7	18.6	18.6	-	21.2	21.2	21.1	-	24.1	24.1	24.1	-
		HI PR	260	261	263	-	301	302	304	-	344	345	346	-	390	391	393	-	439	440	442	-	492	493	495	-
		LO PR	119	121	124	-	126	128	131	-	133	134	137	-	138	139	142	-	143	145	148	-	150	151	154	-
	1890	MBh	58.2	59.0	60.8	-	57.7	58.5	60.3	-	56.2	57.0	58.8	-	53.6	54.5	56.2	-	50.5	51.3	53.0	-	47.6	48.4	50.1	-
		S/T	0.68	0.60	0.46	-	0.68	0.60	0.47	-	0.71	0.63	0.49	-	0.73	0.65	0.51	-	1.00	0.67	0.53	-	1.00	0.72	0.59	-
		Δ T	18	17	13	-	18	16	13	-	18	17	13	-	18	16	13	-	18	16	13	-	19	17	14	-
		kW	3.21	3.21	3.20	-	3.62	3.62	3.61	-	4.08	4.07	4.07	-	4.57	4.56	4.56	-	5.12	5.11	5.11	-	5.76	5.76	5.75	-
		Amps	12.5	12.5	12.5	-	14.4	14.4	14.3	-	16.5	16.4	16.4	-	18.7	18.7	18.7	-	21.2	21.2	21.2	-	24.2	24.2	24.1	-
		HI PR	261	262	264	-	302	303	305	-	345	346	348	-	391	392	394	-	441	442	444	-	494	495	497	-
		LO PR	120	122	125	-	127	129	132	-	134	135	138	-	139	140	143	-	144	146	149	-	151	152	155	-
	2250	MBh	59.7	60.5	62.2	-	59.2	60.0	61.7	-	57.7	58.5	60.2	-	55.1	55.9	57.6	-	51.9	52.7	54.5	-	49.1	49.9	51.6	-
		S/T	0.72	0.64	0.50	-	0.72	0.65	0.51	-	0.75	0.67	0.54	-	0.77	0.69	0.56	-	1.00	0.72	0.58	-	1.00	0.77	0.63	-
		Δ T	17	15	12	-	17	15	12	-	17	15	12	-	17	15	12	-	17	15	12	-	18	16	13	-
		kW	3.24	3.24	3.23	-	3.65	3.64	3.64	-	4.10	4.10	4.09	-	4.59	4.59	4.58	-	5.14	5.14	5.13	-	5.79	5.78	5.78	-
		Amps	12.6	12.6	12.6	-	14.5	14.5	14.5	-	16.6	16.6	16.5	-	18.8	18.8	18.8	-	21.3	21.3	21.3	-	24.3	24.3	24.2	-
		HI PR	264	266	267	-	305	306	308	-	348	349	351	-	394	395	397	-	444	445	447	-	497	498	500	-
		LO PR	123	125	128	-	130	132	135	-	137	138	141	-	142	144	147	-	147	149	152	-	154	155	158	-
75	1750	MBh	57.8	58.6	60.3	63.0	57.3	58.1	59.8	62.4	55.8	56.6	58.3	60.9	53.2	54.0	55.7	58.4	50.1	50.9	52.6	55.2	47.2	48.0	49.7	52.3
		S/T	0.77	0.70	0.56	0.41	0.78	0.70	0.57	0.42	0.81	0.73	0.59	0.45	1.00	0.75	0.61	0.47	1.00	0.77	0.63	0.49	1.00	0.82	0.69	0.54
		Δ T	23	21	18	14	23	21	18	14	23	21	18	14	23	21	18	14	23	21	17	14	24	22	19	15
		kW	3.20	3.20	3.19	3.22	3.61	3.60	3.60	3.63	4.06	4.06	4.05	4.08	4.55	4.55	4.54	4.57	5.10	5.10	5.09	5.12	5.75	5.74	5.74	5.77
		Amps	12.4	12.4	12.4	12.5	14.3	14.3	14.3	14.4	16.4	16.4	16.3	16.5	18.6	18.6	18.6	18.7	21.2	21.1	21.1	21.2	24.1	24.1	24.1	24.2
		HI PR	260	261	263	268	301	302	304	308	344	345	347	351	390	391	393	397	440	441	443	447	493	494	496	500
		LO PR	119	121	124	129	126	128	131	136	133	134	137	142	138	139	142	148	143	145	148	153	150	151	154	159
	1890	MBh	58.3	59.1	60.8	63.4	57.8	58.6	60.3	62.9	56.3	57.1	58.8	61.4	53.7	**54.5**	56.2	58.8	50.5	51.3	53.0	55.7	47.6	48.4	50.2	52.8
		S/T	0.81	0.73	0.59	0.45	0.81	0.74	0.60	0.45	1.00	0.76	0.62	0.48	1.00	**0.78**	0.64	0.50	1.00	0.80	0.67	0.52	1.00	0.86	0.72	0.57
		Δ T	22	20	17	14	22	20	17	14	22	21	17	14	22	**20**	17	14	22	20	17	13	23	21	18	14
		kW	3.21	3.21	3.20	3.23	3.62	3.62	3.61	3.64	4.07	4.07	4.06	4.09	4.56	**4.56**	4.55	4.59	5.11	5.11	5.10	5.13	5.76	5.75	5.75	5.78
		Amps	12.5	12.5	12.5	12.6	14.4	14.4	14.3	14.5	16.4	16.4	16.4	16.5	18.7	**18.7**	18.6	18.8	21.2	21.2	21.2	21.3	24.2	24.1	24.1	24.3
		HI PR	261	263	264	269	302	303	305	310	345	346	348	353	391	**392**	394	399	441	442	444	448	494	495	497	501
		LO PR	120	122	125	130	127	129	132	137	134	135	138	143	139	**140**	144	149	144	146	149	154	151	152	155	160
	2250	MBh	59.7	60.5	62.3	64.9	59.2	60.0	61.7	64.4	57.7	58.5	60.2	62.9	55.1	55.9	57.7	60.3	52.0	52.8	54.5	57.1	49.1	49.9	51.6	54.2
		S/T	0.85	0.77	0.63	0.49	0.86	0.78	0.64	0.50	1.00	0.80	0.67	0.52	1.00	0.82	0.69	0.54	1.00	0.85	0.71	0.56	1.00	1.00	0.76	0.62
		Δ T	21	19	16	12	21	19	16	12	21	19	16	12	21	19	16	12	21	19	15	12	22	20	17	13
		kW	3.24	3.24	3.23	3.26	3.65	3.64	3.63	3.67	4.10	4.10	4.09	4.12	4.59	4.59	4.58	4.61	5.14	5.14	5.13	5.16	5.78	5.78	5.77	5.81
		Amps	12.6	12.6	12.6	12.7	14.5	14.5	14.4	14.6	16.6	16.5	16.5	16.7	18.8	18.8	18.8	18.9	21.3	21.3	21.3	21.4	24.3	24.3	24.2	24.4
		HI PR	265	266	268	272	306	307	308	313	348	349	351	356	394	396	397	402	444	445	447	452	497	498	500	505
		LO PR	123	125	128	133	130	132	135	140	137	138	141	146	142	144	147	152	147	149	152	157	154	155	158	163

IDB: Entering Indoor Dry Bulb Temperature

High and low pressures are measured at the liquid and suction service valves.

Shaded area reflects ACCA (TVA) Rating Conditions.

kW = Total system power

Amps = Outdoor unit amps (compressor + fan)

Cooling Data — DZ16SA0601B* - CAPF4961D6D* + TXV / MBVC2000AA-1A* (cont.)

			Outdoor Ambient Temperature																							
			65ºF				75ºF				85ºF				95ºF				105ºF				115ºF			
			Entering Indoor Wet Bulb Temperature																							
IDB	Airflow		59	63	67	71	59	63	67	71	59	63	67	71	59	63	67	71	59	63	67	71	59	63	67	71
80	1750	MBh	58.1	58.9	60.6	63.3	57.6	58.4	60.1	62.7	56.1	56.9	58.6	61.2	53.5	54.3	56.0	58.7	50.4	51.2	52.9	55.5	47.5	48.3	50.0	52.6
		S/T	0.90	0.82	0.69	0.54	1.00	0.83	0.69	0.55	1.00	0.86	0.72	0.57	1.00	0.88	0.74	0.59	1.00	0.90	0.76	0.62	1.00	1.00	0.81	0.67
		Δ T	27	25	22	18	27	25	22	18	27	25	22	18	27	25	22	18	27	25	21	18	28	26	22	19
		kW	3.20	3.20	3.19	3.22	3.61	3.61	3.60	3.63	4.06	4.06	4.05	4.08	4.55	4.55	4.54	4.58	5.10	5.10	5.09	5.13	5.75	5.75	5.74	5.77
		Amps	12.5	12.4	12.4	12.6	14.3	14.3	14.3	14.4	16.4	16.4	16.4	16.5	18.6	18.6	18.6	18.7	21.2	21.1	21.1	21.3	24.1	24.1	24.1	24.2
		HI PR	261	262	264	268	301	303	304	309	344	345	347	352	390	391	393	398	440	441	443	447	493	494	496	501
		LO PR	120	121	124	129	127	128	131	136	133	135	138	143	139	140	143	148	144	145	148	153	150	152	155	160
	1890	MBh	58.6	59.4	61.1	63.7	58.1	58.9	60.6	63.2	56.6	57.4	59.1	61.7	54.0	54.8	**56.5**	59.1	50.8	51.6	53.3	56.0	47.9	48.7	50.5	53.1
		S/T	0.93	0.86	0.72	0.57	1.00	0.86	0.73	0.58	1.00	0.89	0.75	0.61	1.00	0.91	**0.77**	0.63	1.00	1.00	0.79	0.65	1.00	1.00	0.84	0.70
		Δ T	26	24	21	18	26	24	21	18	26	25	21	18	26	24	**21**	18	26	24	21	17	27	25	22	18
		kW	3.21	3.21	3.20	3.24	3.62	3.62	3.61	3.64	4.08	4.07	4.07	4.10	4.57	4.56	**4.56**	4.59	5.12	5.11	5.11	5.14	5.76	5.76	5.75	5.78
		Amps	12.5	12.5	12.5	12.6	14.4	14.4	14.3	14.5	16.5	16.4	16.4	16.6	18.7	18.7	**18.7**	18.8	21.2	21.2	21.2	21.3	24.2	24.2	24.1	24.3
		HI PR	262	263	265	269	303	304	306	310	346	347	348	353	392	393	**395**	399	441	442	444	449	494	495	497	502
		LO PR	121	122	125	130	128	129	132	137	134	136	139	144	140	141	**144**	149	145	146	149	154	151	153	156	161
	2250	MBh	60.0	60.8	62.6	65.2	59.5	60.3	62.0	64.7	58.0	58.8	60.5	63.2	55.4	56.2	58.0	60.6	52.3	53.1	54.8	57.4	49.4	50.2	51.9	54.5
		S/T	1.00	0.90	0.76	0.62	1.00	0.91	0.77	0.62	1.00	0.93	0.79	0.65	1.00	0.95	0.81	0.67	1.00	1.00	0.84	0.69	1.00	1.00	0.89	0.74
		Δ T	25	23	20	16	25	23	20	16	25	23	20	16	25	23	20	16	25	23	19	16	26	24	21	17
		kW	3.24	3.24	3.23	3.26	3.65	3.64	3.64	3.67	4.10	4.10	4.09	4.12	4.59	4.59	4.58	4.61	5.14	5.14	5.13	5.16	5.79	5.78	5.78	5.81
		Amps	12.6	12.6	12.6	12.7	14.5	14.5	14.4	14.6	16.6	16.6	16.5	16.7	18.8	18.8	18.8	18.9	21.3	21.3	21.3	21.4	24.3	24.3	24.2	24.4
		HI PR	265	266	268	273	306	307	309	313	349	350	352	356	395	396	398	402	445	446	448	452	498	499	501	505
		LO PR	124	125	128	133	131	132	135	140	137	139	142	147	143	144	147	152	148	149	152	157	154	156	159	164
85	1750	MBh	59.1	59.9	61.6	64.2	58.6	59.4	61.1	63.7	57.1	57.9	59.6	62.2	54.5	55.3	57.0	59.6	51.3	52.1	53.8	56.5	48.4	49.3	51.0	53.6
		S/T	1.00	0.93	0.79	0.64	1.00	0.93	0.80	0.65	1.00	1.00	0.82	0.68	1.00	1.00	0.84	0.70	1.00	1.00	0.86	0.72	1.00	1.00	0.92	0.77
		Δ T	30	29	25	22	30	28	25	22	31	29	25	22	30	28	25	22	30	28	25	21	31	29	26	23
		kW	3.21	3.21	3.20	3.23	3.62	3.61	3.61	3.64	4.07	4.07	4.06	4.09	4.56	4.56	4.55	4.58	5.11	5.11	5.10	5.13	5.76	5.75	5.75	5.78
		Amps	12.5	12.5	12.4	12.6	14.4	14.3	14.3	14.5	16.4	16.4	16.4	16.5	18.7	18.7	18.6	18.8	21.2	21.2	21.2	21.3	24.1	24.1	24.1	24.2
		HI PR	262	263	265	269	303	304	306	310	345	347	348	353	392	393	395	399	441	442	444	449	494	495	497	502
		LO PR	121	123	126	131	129	130	133	138	135	136	139	144	140	142	145	150	146	147	150	155	152	154	157	162
	1890	MBh	59.5	60.3	62.1	64.7	59.0	59.8	61.6	64.2	57.5	58.3	60.1	62.7	54.9	55.8	57.5	60.1	51.8	52.6	54.3	56.9	48.9	49.7	51.4	54.1
		S/T	1.00	0.96	0.82	0.68	1.00	0.97	0.83	0.68	1.00	1.00	0.85	0.71	1.00	1.00	0.87	0.73	1.00	1.00	0.90	0.75	1.00	1.00	0.95	0.80
		Δ T	30	28	25	21	30	28	25	21	30	28	25	21	30	28	25	21	29	28	24	21	31	29	25	22
		kW	3.22	3.22	3.21	3.24	3.63	3.63	3.62	3.65	4.08	4.08	4.07	4.10	4.57	4.57	4.56	4.60	5.12	5.12	5.11	5.14	5.77	5.76	5.76	5.79
		Amps	12.5	12.5	12.5	12.6	14.4	14.4	14.4	14.5	16.5	16.5	16.4	16.6	18.7	18.7	18.7	18.8	21.3	21.2	21.2	21.3	24.2	24.2	24.2	24.3
		HI PR	263	264	266	271	304	305	307	311	347	348	350	354	393	394	396	400	443	444	445	450	496	497	499	503
		LO PR	122	124	127	132	130	131	134	139	136	137	140	146	141	143	146	151	147	148	151	156	153	155	158	163
	2250	MBh	61.0	61.8	63.5	66.1	60.5	61.3	63.0	65.6	59.0	59.8	61.5	64.1	56.4	57.2	58.9	61.5	53.2	54.0	55.8	58.4	50.4	51.2	52.9	55.5
		S/T	1.00	1.00	0.86	0.72	1.00	1.00	0.87	0.73	1.00	1.00	0.90	0.75	1.00	1.00	0.92	0.77	1.00	1.00	0.94	0.79	1.00	1.00	1.00	0.85
		Δ T	28	27	23	20	28	27	23	20	29	27	23	20	28	27	23	20	28	26	23	19	29	27	24	21
		kW	3.25	3.24	3.24	3.27	3.66	3.65	3.64	3.68	4.11	4.11	4.10	4.13	4.60	4.60	4.59	4.62	5.15	5.15	5.14	5.17	5.79	5.79	5.78	5.82
		Amps	12.7	12.7	12.6	12.8	14.5	14.5	14.5	14.6	16.6	16.6	16.6	16.7	18.9	18.8	18.8	19.0	21.4	21.4	21.3	21.5	24.3	24.3	24.3	24.4
		HI PR	266	267	269	274	307	308	310	315	350	351	353	357	396	397	399	404	446	447	449	453	499	500	502	506
		LO PR	126	127	130	135	133	134	137	142	139	141	144	149	144	146	149	154	150	151	154	159	156	158	161	166

IDB: Entering Indoor Dry Bulb Temperature

High and low pressures are measured at the liquid and suction service valves.

Shaded area reflects AHRI Rating Conditions.

kW = Total system power

Amps = Outdoor unit amps (compressor + fan)

DZ16SA0181B* - ASPT29B14A* + TXV

	Outdoor Ambient Temperature																
	65	60	55	50	47	45	40	35	30	25	20	17	15	10	5	0	-5
MBh	23.1	21.7	20.3	18.9	**18.0**	17.4	15.7	14.2	13.0	12.0	11.4	11.0	10.5	9.4	8.2	7.0	5.9
T/R	20.6	19.5	18.4	17.3	16.7	16.1	14.6	13.1	12.0	11.1	10.5	10.2	9.8	8.7	7.6	6.5	5.4
kW	1.37	1.35	1.34	1.33	**1.32**	1.31	1.30	1.29	1.27	1.26	1.25	1.24	1.23	1.22	1.21	1.20	1.18
Amps	6.7	6.2	5.7	5.3	5.1	4.9	4.6	4.4	4.1	3.9	3.7	3.6	3.5	3.3	3.1	2.8	2.5
COP	4.95	4.69	4.43	4.17	4.00	3.87	3.55	3.23	2.98	2.80	2.67	2.60	2.50	2.25	1.99	1.72	1.45

DZ16SA0241B* - ASPT29B14A* + TXV

	Outdoor Ambient Temperature																
	65	60	55	50	47	45	40	35	30	25	20	17	15	10	5	0	-5
MBh	30.9	29.0	27.1	25.2	**24.0**	23.1	20.9	18.8	17.2	15.9	15.0	14.5	13.9	12.3	10.7	9.1	7.5
T/R	27.5	26.0	24.6	23.1	22.2	21.4	19.4	17.4	15.9	14.7	13.9	13.4	12.8	11.4	9.9	8.4	7.0
kW	1.83	1.81	1.79	1.77	**1.76**	1.75	1.73	1.71	1.69	1.67	1.65	1.63	1.63	1.61	1.58	1.56	1.54
Amps	9.0	8.2	7.6	7.1	6.8	6.6	6.2	5.8	5.5	5.2	4.9	4.7	4.6	4.3	4.0	3.7	3.3
COP	4.94	4.68	4.43	4.17	4.00	3.87	3.54	3.23	2.98	2.80	2.67	2.60	2.50	2.24	1.98	1.71	1.43

DZ16SA0301B* - ASPT37C14A* + TXV

	Outdoor Ambient Temperature																
	65	60	55	50	47	45	40	35	30	25	20	17	15	10	5	0	-5
MBh	39.1	36.4	33.9	31.1	**29.4**	28.0	24.7	21.7	19.2	17.4	16.0	15.2	14.3	11.9	9.5	7.2	4.8
T/R	35.1	32.9	30.7	28.5	27.2	26.0	22.9	20.1	17.8	16.1	14.8	14.1	13.2	11.0	8.8	6.6	4.4
kW	2.42	2.35	2.27	2.20	**2.15**	2.12	2.05	1.98	1.90	1.83	1.76	1.71	1.68	1.61	1.54	1.46	1.39
Amps	11.0	10.1	9.3	8.7	8.3	8.1	7.6	7.1	6.7	6.4	6.0	5.8	5.7	5.3	4.9	4.5	4.0
COP	4.73	4.55	4.37	4.15	4.00	3.87	3.53	3.21	2.96	2.78	2.66	2.60	2.48	2.16	1.82	1.43	1.01

DZ16SA0361B* - ASPT37C14A* + TXV

	Outdoor Ambient Temperature																
	65	60	55	50	47	45	40	35	30	25	20	17	15	10	5	0	-5
MBh	44.5	41.9	39.2	36.7	**35.0**	33.8	30.8	28.0	25.6	23.9	22.7	22.0	21.1	19.0	16.8	14.6	12.5
T/R	39.6	37.6	35.6	33.6	32.4	31.3	28.5	25.9	23.7	22.1	21.0	20.4	19.6	17.6	15.6	13.6	11.5
kW	2.62	2.60	2.59	2.57	**2.56**	2.56	2.54	2.53	2.52	2.50	2.49	2.48	2.47	2.46	2.45	2.43	2.42
Amps	13.3	12.2	11.3	10.5	10.1	9.8	9.2	8.7	8.2	7.8	7.3	7.1	6.9	6.5	6.0	5.5	5.0
COP	4.99	4.72	4.45	4.18	4.00	3.87	3.55	3.24	2.98	2.80	2.67	2.60	2.50	2.26	2.01	1.76	1.51

Above information is for nominal CFM and 70 degree indoor dry bulb. Instantaneous capacity listed.

Goodman Manufacturing Company, L.P. reserves the right to discontinue, or change at any time, specifications or designs without notice or without incurring obligations.

DZ16SA0421B* - ASPT47D14A* + TXV

	Outdoor Ambient Temperature																
	65	60	55	50	47	45	40	35	30	25	20	17	15	10	5	0	-5
MBh	51.0	47.9	44.9	41.9	**40.0**	38.6	35.2	31.9	29.2	27.2	25.8	25.0	24.0	21.5	19.0	16.5	14.0
T/R	45.4	43.1	40.7	38.4	37.0	35.8	32.6	29.5	27.0	25.2	23.9	23.1	22.2	19.9	17.6	15.3	13.0
kW	3.31	3.26	3.21	3.16	**3.13**	3.11	3.05	3.00	2.95	2.90	2.85	2.82	2.80	2.75	2.69	2.64	2.59
Amps	16.4	15.1	14.0	13.0	12.5	12.2	11.4	10.8	10.2	9.6	9.1	8.8	8.6	8.1	7.5	6.9	6.2
COP	4.51	4.31	4.10	3.89	3.75	3.64	3.37	3.11	2.90	2.75	2.65	2.60	2.51	2.29	2.07	1.83	1.58

DZ16SA0481B* - ASPT49D14A* + TXV

	Outdoor Ambient Temperature																
	65	60	55	50	47	45	40	35	30	25	20	17	15	10	5	0	-5
MBh	62.1	57.9	53.7	49.6	**47.0**	45.0	40.0	35.5	31.8	29.0	26.9	25.8	24.4	20.9	17.3	13.8	10.3
T/R	55.3	52.0	48.8	45.5	43.5	41.7	37.0	32.8	29.4	26.9	24.9	23.9	22.6	19.3	16.0	12.8	9.5
kW	3.83	3.72	3.62	3.51	**3.44**	3.40	3.29	3.19	3.08	2.97	2.86	2.80	2.76	2.65	2.54	2.44	2.33
Amps	17.9	16.4	15.2	14.1	13.5	13.2	12.4	11.6	11.0	10.4	9.8	9.5	9.3	8.7	8.1	7.4	6.6
COP	4.75	4.56	4.35	4.14	4.00	3.88	3.56	3.26	3.02	2.86	2.75	2.70	2.59	2.31	2.00	1.66	1.29

DZ16SA0601B* - CAPF4961D6D* + TXV / MBVC2000AA-1A*

	Outdoor Ambient Temperature																
	65	60	55	50	47	45	40	35	30	25	20	17	15	10	5	0	-5
MBh	76.8	72.1	67.5	62.9	**60.0**	57.9	52.6	47.5	43.4	40.4	38.2	37.0	35.5	31.6	27.8	24.0	20.1
T/R	68.3	64.8	61.2	57.7	55.6	53.6	48.7	44.0	40.2	37.4	35.4	34.3	32.8	29.3	25.7	22.2	18.6
kW	5.05	4.99	4.92	4.86	**4.82**	4.79	4.73	4.66	4.60	4.53	4.47	4.43	4.40	4.33	4.27	4.20	4.14
Amps	25.2	23.2	21.4	19.9	19.0	18.5	17.4	16.3	15.4	14.6	13.8	13.3	13.0	12.1	11.3	10.3	9.2
COP	4.45	4.23	4.02	3.80	3.65	3.54	3.26	2.99	2.77	2.61	2.51	2.45	2.36	2.14	1.91	1.67	1.43

Above information is for nominal CFM and 70 degree indoor dry bulb. Instantaneous capacity listed.

Goodman Manufacturing Company, L.P. reserves the right to discontinue, or change at any time, specifications or designs without notice or without incurring obligations.

DZ16SA0181B* + ASPT29B14A* + TXV Conditions: 80 °F IBD, 67 °F IWB @ 600 CFM				
Outdoor Tem. ° F.	Total BTU/h	Sensible BTU/h	Latent BTU/h	Total Watts
75	19,300	14,089	5,211	1,120
80	19,050	14,189	4,862	1,185
85	18,800	14,288	4,512	1,250
90	18,400	14,164	4,236	1,325
95	**18,000**	**14,040**	**3,960**	**1,400**
100	17,500	13,820	3,680	1,480
105	17,000	13,600	3,400	1,560
110	16,550	14,850	1,700	1,655
115	16,100	16,100	0	1,750
TVA Conditions @ 95° OD DB, 75° ID DB 63° ID WB				
95°	**17,400**	**13,746**	**3,654**	**1,400**

DZ16SA0241B* + ASPT29B14A* + TXV Conditions: 80 °F IBD, 67 °F IWB @ 800 CFM				
Outdoor Tem. ° F.	Total BTU/h	Sensible BTU/h	Latent BTU/h	Total Watts
75	25,700	18,761	6,939	1,490
80	25,400	18,919	6,482	1,580
85	25,100	19,076	6,024	1,670
90	24,550	18,898	5,652	1,765
95	**24,000**	**18,720**	**5,280**	**1,860**
100	23,350	18,440	4,910	1,970
105	22,700	18,160	4,540	2,080
110	22,050	18,175	3,875	2,205
115	21,400	18,190	3,210	2,330
TVA Conditions @ 95° OD DB, 75° ID DB 63° ID WB				
95°	**23,100**	**18,249**	**4,851**	**1,860**

DZ16SA0301B* + ASPT37C14A* + TXV Conditions: 80 °F IBD, 67 °F IWB @ 975 CFM				
Outdoor Tem. ° F.	Total BTU/h	Sensible BTU/h	Latent BTU/h	Total Watts
75	30,900	22,557	8,343	1,770
80	30,500	22,717	7,784	1,880
85	30,100	22,876	7,224	1,990
90	29,450	22,670	6,780	2,110
95	**28,800**	**22,464**	**6,336**	**2,230**
100	28,000	22,112	5,888	2,365
105	27,200	21,760	5,440	2,500
110	26,450	21,803	4,648	2,660
115	25,700	21,845	3,855	2,820
TVA Conditions @ 95° OD DB, 75° ID DB 63° ID WB				
95°	**27,800**	**21,962**	**5,838**	**2,240**

DZ16SA0361B* + ASPT37C14A* + TXV Conditions: 80 °F IBD, 67 °F IWB @ 1060 CFM				
Outdoor Tem. ° F.	Total BTU/h	Sensible BTU/h	Latent BTU/h	Total Watts
75	36,700	26,424	10,276	2,090
80	36,250	26,637	9,613	2,225
85	35,800	26,850	8,950	2,360
90	35,000	26,592	8,408	2,505
95	**34,200**	**26,334**	**7,866**	**2,650**
100	33,250	25,926	7,325	2,815
105	32,300	25,517	6,783	2,980
110	31,400	25,569	5,832	3,170
115	30,500	25,620	4,880	3,360
TVA Conditions @ 95° OD DB, 75° ID DB 63° ID WB				
95°	**33,000**	**25,740**	**7,260**	**2,660**

DZ16SA0421B* + ASPT47D14A* + TXV Conditions: 80 °F IBD, 67 °F IWB @ 1140 CFM				
Outdoor Tem. ° F.	Total BTU/h	Sensible BTU/h	Latent BTU/h	Total Watts
75	41,800	28,842	12,958	2,400
80	41,300	28,905	12,395	2,550
85	40,800	28,968	11,832	2,700
90	39,900	28,719	11,181	2,860
95	**39,000**	**28,470**	**10,530**	**3,020**
100	37,900	28,035	9,865	3,205
105	36,800	27,600	9,200	3,390
110	35,800	27,720	8,080	3,615
115	34,800	27,840	6,960	3,840
TVA Conditions @ 95° OD DB, 75° ID DB 63° ID WB				
95°	**37,600**	**27,824**	**9,776**	**3,030**

DZ16SA0481B* + ASPT49D14A* + TXV Conditions: 80 °F IBD, 67 °F IWB @ 1400 CFM				
Outdoor Tem. ° F.	Total BTU/h	Sensible BTU/h	Latent BTU/h	Total Watts
75	48,800	34,160	14,640	2,800
80	48,200	34,454	13,746	2,975
85	47,600	34,748	12,852	3,150
90	46,550	34,437	12,114	3,340
95	**45,500**	**34,125**	**11,375**	**3,530**
100	44,250	33,618	10,633	3,740
105	43,000	33,110	9,890	3,950
110	41,800	33,201	8,599	4,200
115	40,600	33,292	7,308	4,450
TVA Conditions @ 95° OD DB, 75° ID DB 63° ID WB				
95°	**43,900**	**33,364**	**10,536**	**3,530**

DZ16SA0601B* - CAPF4961D6D* + TXV/ MBVC2000AA-1A* Conditions: 80 °F IBD, 67 °F IWB @ 1850 CFM				
Outdoor Tem. ° F.	Total BTU/h	Sensible BTU/h	Latent BTU/h	Total Watts
75	60,600	44,238	16,362	3,610
80	59,850	44,282	15,569	3,840
85	59,100	44,325	14,775	4,070
90	57,800	43,915	13,885	4,315
95	**56,500**	**43,505**	**12,995**	**4,560**
100	54,900	42,806	12,094	4,835
105	53,300	42,107	11,193	5,110
110	51,900	42,264	9,637	5,430
115	50,500	42,420	8,080	5,750
TVA Conditions @ 95° OD DB, 75° ID DB 63° ID WB				
95°	**54,500**	**42,510**	**11,990**	**4,560**

All AHRI system ratings are accessible in the Unitary Matchup Tool via Daikin City or in the Daikin System Configurator tool via PartnerLink.

ECN	REV	ZONE	DESCRIPTION	CHK	D	DATE
XXXXXXX	A	XXXXX		-	GL	

MODEL	DIMENSIONS		
	W"	D"	H"
DZ16SA0181**	29	29	36⅜
DZ16SA0241**	35½	35½	34⅝
DZ16SA0301**	35½	35½	34⅝
DZ16SA0361**	35½	35½	40
DZ16SA0421**	29	29	36⅜
DZ16SA0481**	35½	35½	34⅝
DZ16SA0601**	35½	35½	40

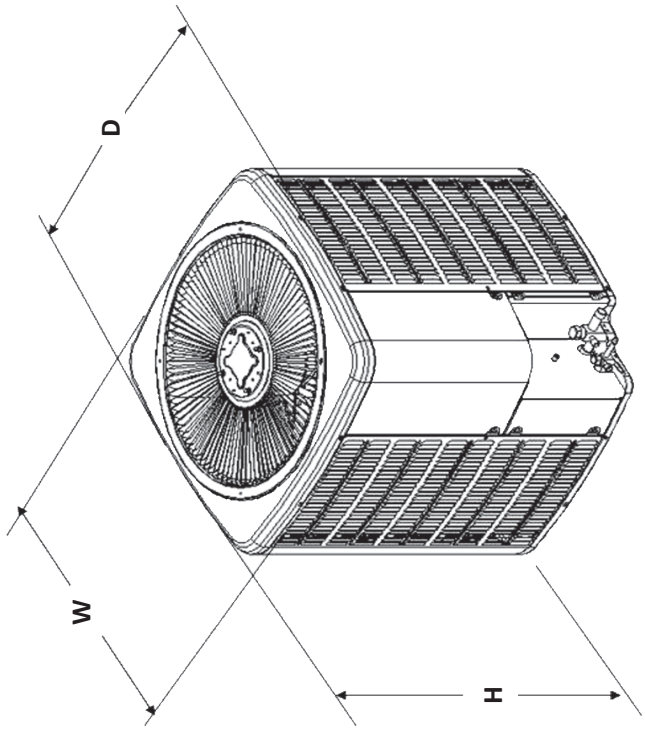

SPECIAL CHARACTERISTICS:

6σ = 6SIGMA

CC CRITICAL CHARACTERISTIC

SC SIGNIFICANT CHARACTERISTIC

COMPONENTS AND MATERIALS SPECIFIED HEREIN WILL ALSO CONFORM TO THE APPLICABLE SECTION OF GOODMAN MSP 824.01 WORKMANSHIP STANDARD FOR FIT, FEEL AND FINISH.

CONFIDENTIAL PROPERTY OF THE GOODMAN MANUFACTURING COMPANY, LP. NOT TO BE DISCLOSED TO OTHERS, COPIED, OR USED FOR ANY PURPOSE EXCEPT AS AUTHORIZED IN WRITING. MUST BE RETURNED UPON DEMAND, ON COMPLETION OF ORDER, OR OTHER PURPOSE FOR WHICH IT WAS LENT.

DRAWING TO BE INTERPRETED IN ACCORDANCE WITH ASME Y14.100 DIMENSIONS ARE IN INCHES UNLESS OTHERWISE NOTED

TOLERANCES:
ANGLES ±1.5°
X ± 1 XX ± .03
XXX ± .015
HOLES ± .005
TUBE CUT LG ± .063

DAIKIN MANUFACTURING CO., LLC

DZ16SA

DWN BY: ENG:

DO NOT SCALE DRAWING

SHT 1 OF 1

REV A

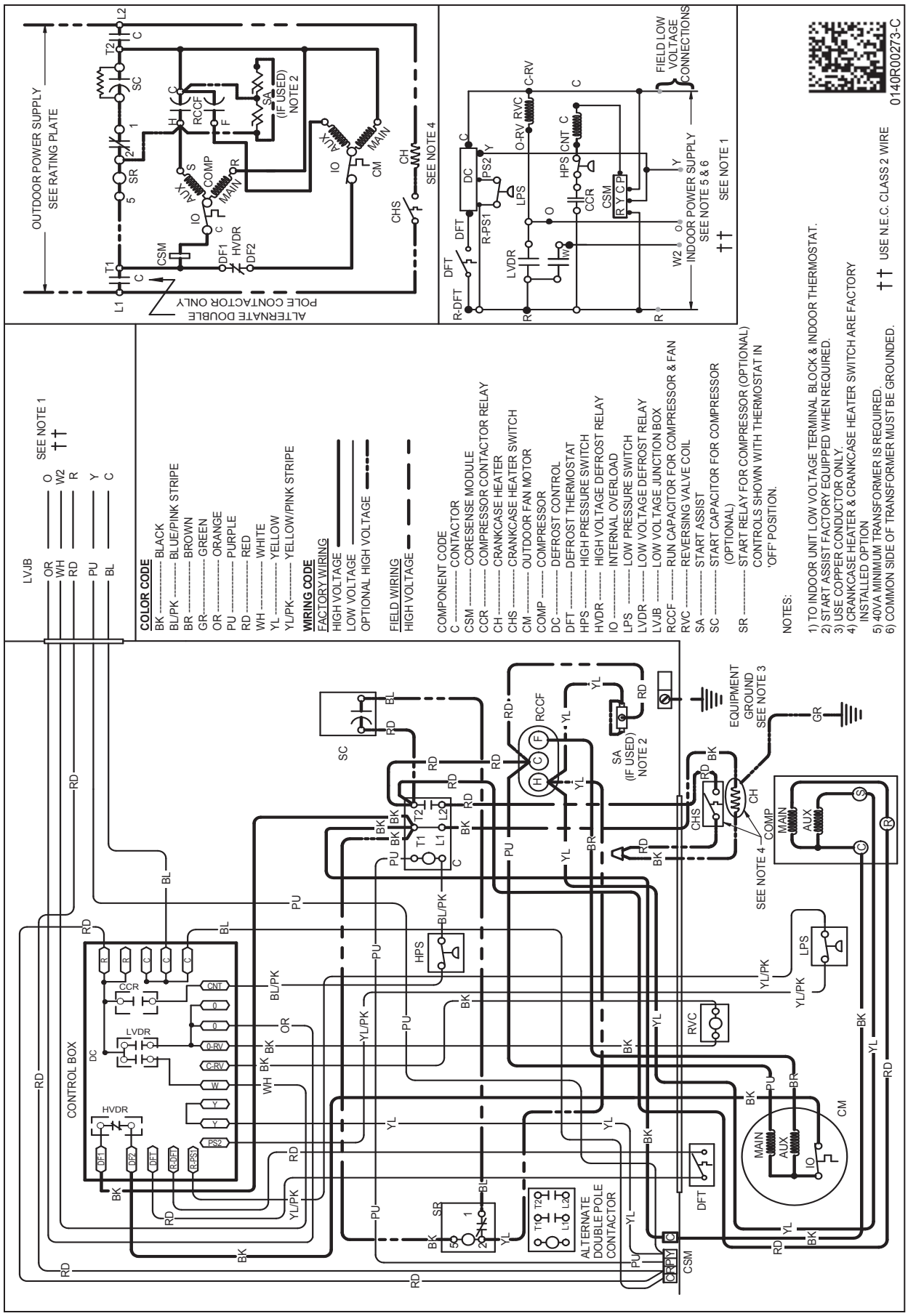

WARNING

High Voltage: Disconnect all power before servicing or installing this unit. Multiple power sources may be present. Failure to do so may cause property damage, personal injury, or death.

Wiring is subject to change. Always refer to the wiring diagram on the unit for the most up-to-date wiring.

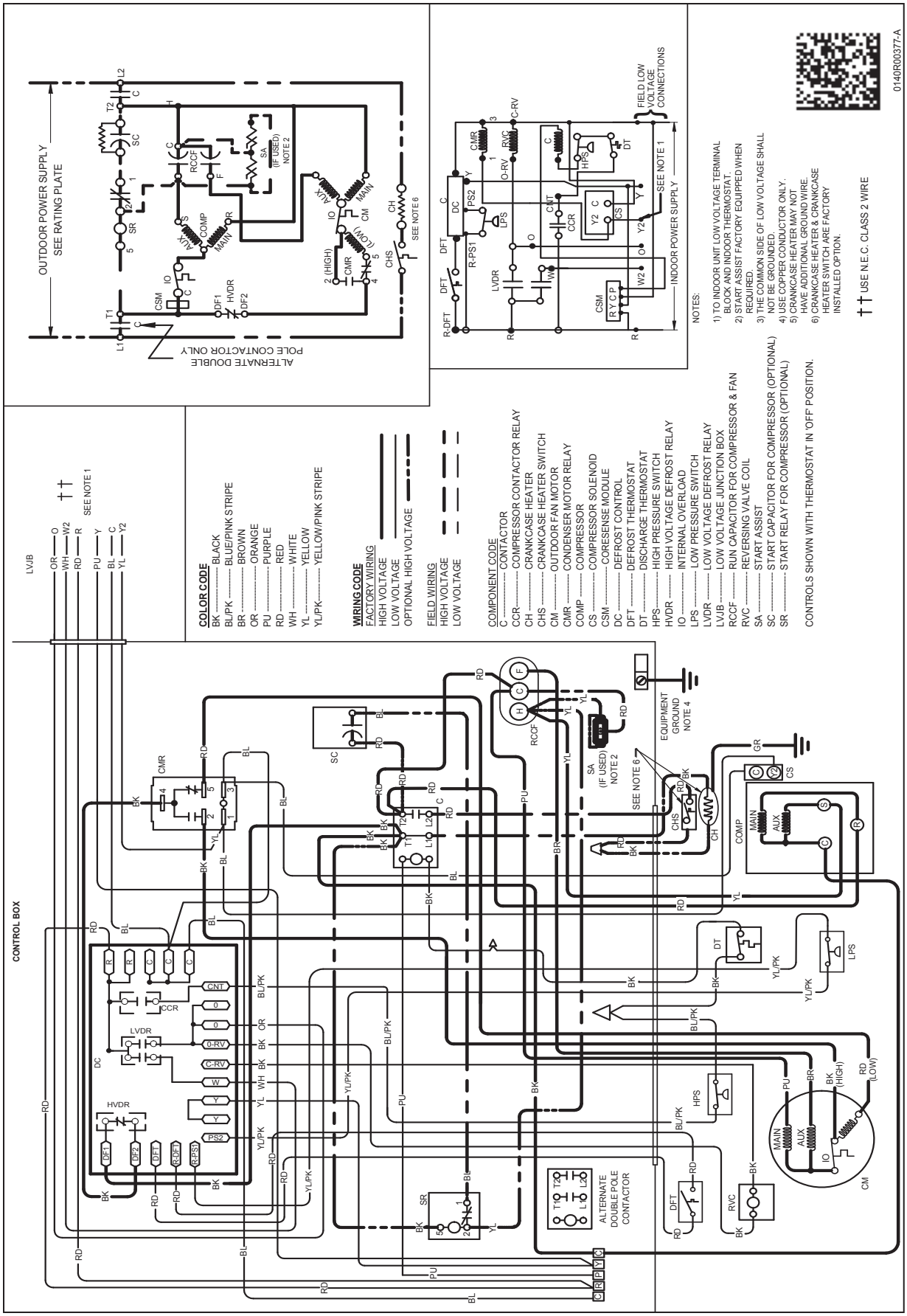

WARNING

High Voltage: Disconnect all power before servicing or installing this unit. Multiple power sources may be present. Failure to do so may cause property damage, personal injury, or death.

Wiring is subject to change. Always refer to the wiring diagram on the unit for the most up-to-date wiring.

MODEL #	DESCRIPTION	DZ16SA 018	DZ16SA 024	DZ16SA 030	DZ16SA 036	DZ16SA 042	DZ16SA 048	DZ16SA 060
ABK-20	Anchor Bracket Kit ◊	X	X	X	X	X	X	X
CSR-U-1	Hard-start Kit	X	X	X	X	X	X	
CSR-U-3	Hard-start Kit							X
FSK01A[1]	Freeze Protection Kit	X	X	X	X	X	X	X
LAKT01A	Low-Ambient Kit	X	X	X	X	X	X	X
OT18-60A[2]	Outdoor Thermostat w/ Lockout Stat	X	X	X	X	X	X	X
TX2N4A[3]	TXV Kit	X	X					
TX3N4	TXV Kit			X	X			
TX5N4	TXV Kit					X	X	X

◊ Contains 20 brackets; four brackets needed to anchor unit to pad
1 Installed on indoor coil
2 Required for heat pump applications where ambient temperatures fall below 0°F with 50% or higher relative humidity.
3 Condensing units and heat pumps with reciprocating compressors require the use of start-assist components when used in conjunction with an indoor coil using a non-bleed thermal expansion valve refrigerant metering device or liquid line solenoid kit. The TXV should always be sized based on the tonnage of the outdoor unit.

Our continuing commitment to quality products may mean a change in specifications without notice.
©2019 **DAIKIN MANUFACTURING COMPANY, L.P.** • Houston, Texas • Printed in the USA.