GENERAFRIO
LIDERES EN SISTEMAS DE AIRE ACONDICIONADO Y REFRIGERACION

Honeywell

35 and 70 lb-in. Non-Spring Return Direct Coupled Actuators

ML6161, ML7161, ML6174, ML7174

PRODUCT DATA

FEATURES

- **Selectable 45°, 60°, or 90° stroke in both clockwise (cw) or counterclockwise (ccw) directions.**
- **0° to 30° minimum position adjustment (cw or ccw direction) on all models.**
- **Magnetic coupling eliminates the need for mechanical stops.**
- **Two field-addable auxiliary switches.**
- **Auxiliary feedback potentiometer field-addable on select models.**
- **Manual declutch on all models.**
- **ML7161 and ML7174 models include standard reverse/ direct acting rotation switch on outside cover.**
- **W7620 Terminal Unit Controller compatibility.**
- **Commercial zone damper in W7600 Commercial Zone System compatibility.**

APPLICATION

The 35 and 70 lb-in. (4 Nm and 8 Nm) Non-Spring Return Direct Coupled Actuators (DCA) are control actuators that provide floating or proportioning control for valves and dampers. The proportioning actuators accept a current or voltage signal from a controller to position the damper or valve at any chosen point between fully open and fully closed.

Floating actuators are suitable for use with single pole double throw (spdt) floating thermostats or two-position control systems.

Two-position control requires installation of the 201052B Auxiliary Switch.

Contents

Features 1
Application 1
Specifications 2
Ordering Information 2
Installation 4
Operation 9
Checkout 11

63-2209—9

SPECIFICATIONS

Models: See Table 1.

Dimensions: See Figures 1, 1A, and 1B.

Electrical Ratings:
Power Input: 24 Vac ±20%, 50/60 Hz.
Impedance:
2-10 Vdc: 45k ohms.
4-20 mA: 536 ohms.
Power Consumption: See Table 2.
Auxiliary Switch Ratings:
Electrical: Selective NO or NC, not simultaneous.
Pilot Duty: 50 VA, 24 Vac.
Switch Differential: Three angular degree maximum.

Torque Ratings (at Rated Voltages): See Table 3.

Actuator Stroke:
Selectable: 45°, 60°, and 90°.
Rotation: Clockwise (cw) and counterclockwise (ccw).

NOTE: Reversing drive rotation of the ML7161 and ML7174 requires changing the control signal from 2-10 Vdc to 10-2 Vdc.

Device Weight: 1.3 lb (0.58 kg).

Actuator Timing for 90° Stroke: See Table 4.

Mounting: Mounts directly on 3/8 in. to 1/2 in. (10 to 13 mm) round or square shaft. Can be mounted with shaft in any position with two 1/4 in. (6 mm) 28 NF Allen screws. Minimum Shaft Length Required: 1-3/4 in. (45 mm).

Temperature Ratings:
Ambient: 20° F to 125° F (-18° C to 50° C).
Derated Timing to: -20° F (-29° C).
Shipping and Storage: -20° F to 130° F (-29° C to 54° C).
Humidity Ratings: 5% to 95% RH noncondensing.

Actuator Minimum Design Life: See Table 5.

Noise Output: 45 dBA at 1 meter maximum.

Feedback Potentiometer Ratings:
Electrical Rating (200976A,C Potentiometer): 24 Vac, 50/60 Hz, 2.25W.
Resistance Output (Resistance Linear as Measured Between Terminals R-B):
0 ohms (at 0°, cw stroke).
250 ohms (at 45°, cw stroke).
333 ohms (at 60°, cw stroke).
500 ohms (at 90°, cw stroke).

Environmental Protection Ratings:
NEMA1.
ML6161E, ML6174E, ML7161E, ML7174E *only*: IP54.

Approvals:
Underwriter's Laboratories Inc. Component Recognized: File No. E4436; Guide No. XAPX2.
UL94-5V: Meets plenum requirements.
Canadian Standards Association Certified (includes Auxiliary Switch).
ML6161E, ML6174E, ML7161E, ML7174E *only*: CE.

Accessories:
200976A Auxiliary Potentiometer (0 to 500 ohm).
200976C Auxiliary Potentiometer (0 to 2000 ohm).
201052A Auxiliary Switch (one).
201052B Auxiliary Switch (two).
201391 Shaft Adapter (included).
4074ENJ Bag Assembly—includes stop pin, shaft adapter, and two minimum-position screws.
4074ENY Bag Assembly—includes stop pin and shaft adapter.
4074EVK Short Shaft Extender.
7640QW Metal Enclosure—for attaching conduit to actuator.
T641 Floating Thermostat—for use with seven-minute models.
T6984 Floating Thermostat—for use with 90-second and seven-minute models.
T7984 Modulating Thermostat—for use with ML7161 or ML7174.

ORDERING INFORMATION

When purchasing replacement and modernization products from your TRADELINE® wholesaler or distributor, refer to the TRADELINE® Catalog or price sheets for complete ordering number.

If you have additional questions, need further information, or would like to comment on our products or services, please write or phone:

1. Your local Honeywell Automation and Control Products Sales Office (check white pages of your phone directory).
2. Honeywell Customer Care
   1885 Douglas Drive North
   Minneapolis, Minnesota 55422-4386

In Canada—Honeywell Limited/Honeywell Limitée, 35 Dynamic Drive, Toronto, Ontario M1V 4Z9.
International Sales and Service Offices in all principal cities of the world. Manufacturing in Australia, Canada, Finland, France, Germany, Japan, Mexico, Netherlands, Spain, Taiwan, United Kingdom, U.S.A.

Table 1. 35 lb-in. and 75 lb-in. DCA models.

ML	Motor Linkage					
	61	Floating Control				
	71	4-20 mA/2-10 Vdc Control				
		61	35 lb-in. (4 Nm), Non-Spring Return			
		74	70 lb-in. (8 Nm), Non-Spring Return			
			A	Includes output for feedback potentiometer.		
			B	Standard (includes minimum-position setscrews).		
			C	Includes output for feedback potentiometer and cover with conduit connections.		
			D	Includes cover with conduit connections.		
			E	Standard with European ratings.		
				1	Standard.	
				2	Includes declutch function.	
ML	**61**	**61**	**B**	**1**	**XXX**	**Varies by model**

Table 2. Power Consumption.

Model	Power Consumption
ML6161A,B,C,D	1.8 VA
ML7161A	4.8 VA
ML6174A,B	2.4 VA
ML7174A	5.4 VA

Table 3. Torque Ratings.

	35 lb-in. DCA lb-in. (Nm)	70 lb-in. DCA lb-in. (Nm)
Running	35 (4)	70 (8)
Breakaway		
Stall Minimum	45 (5)	
Stall Maximum	70 (8)	130 (14)

Table 4. Actuator 90° Stroke Timing.

	At 50 Hz	At 60 Hz
90 Second Models	108 sec	90 sec
Three-Minute Models	216 sec	180 sec
Seven-Minute Models	504 sec	420 sec

Table 5. Actuator Minimum Design Life.

	35 lb-in. (4 Nm) DCA	70 lb-in. (8 Nm) DCA
Cycles	50,000	40,000
Repositions	1,500,000	1,500,000

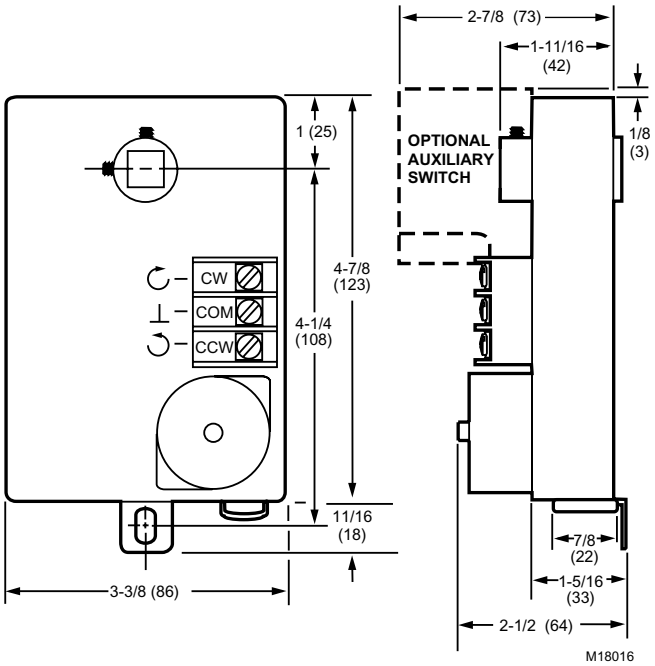

Fig. 1a. Approximate dimensions of ML6161A,B,E and ML6174A,B,E DCA in inches (mm).

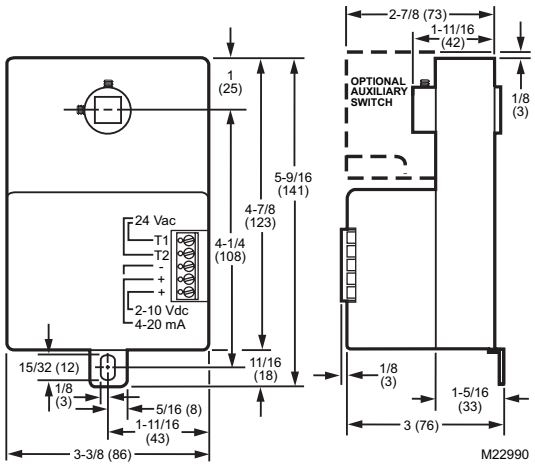

Fig. 1b. Approximate dimensions of ML7161, ML7174 DCA in inches (mm).

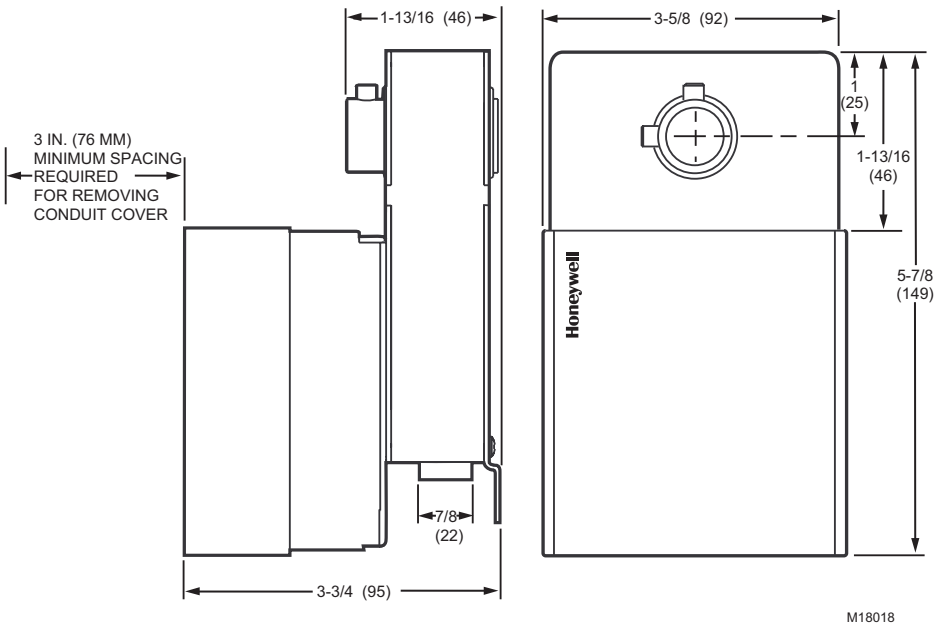

Fig. 1c. Approximate dimensions of ML6161C,D and ML6174C,D DCA in inches (mm).

INSTALLATION

When Installing this Product...

1. Read these instructions carefully. Failure to follow them could damage the product or cause a hazardous condition.
2. Check the ratings given in the instructions and on the product to make sure the product is suitable for your application.
3. Installer must be a trained, experienced service technician.
4. After installation is complete, check out product operation as provided in these instructions.

IMPORTANT

All wiring must agree with applicable codes, ordinances and regulations.

⚠ WARNING

Explosion Hazard.
A spark from the actuator or attached accessories can result in serious injury or death.
Install the actuator in areas free of escaping gas and other explosive vapors.

⚠ CAUTION

Electrical Shock or Equipment Damage Hazard.
Can shock individuals or short equipment circuitry.
Disconnect all power supplies before installation. Actuators with auxiliary switches can have more than one disconnect.

⚠ CAUTION

Actuator Damage Hazard.
Deteriorating vapors and acid fumes can damage the actuator metal parts.
Install actuator in areas free of acid fumes and deteriorating vapors.

Location

Choose a location for the actuator that allows enough clearance for mounting accessories and for servicing.

Mounting

These actuators are designed to open a damper or valve by driving the shaft in either the clockwise (cw) ↷ or counterclockwise (ccw) ↶ direction. The actuator has a mounting tab on the bottom that secures it to a damper box or valve linkage. When mounted correctly, this tab allows the actuator to float without rotating relative to the shaft. The tab is sized for 1/4 in. (6 mm) screw or pin (not included).

⚠ CAUTION

Equipment Damage Hazard.
Tightly securing mounting tab to damper housing can damage actuator.
Once mounted, the actuator must be allowed to float; do not fully tighten the screw.

These actuators are shipped in the fully clockwise 90° position as viewed from the end of the damper shaft.

⚠ CAUTION

Equipment Damage Hazard.
Mounting actuator unevenly with damper housing can damage actuator.
Mount actuator flush with damper housing or add spacer between mounting tab and damper box housing (see Fig. 2).

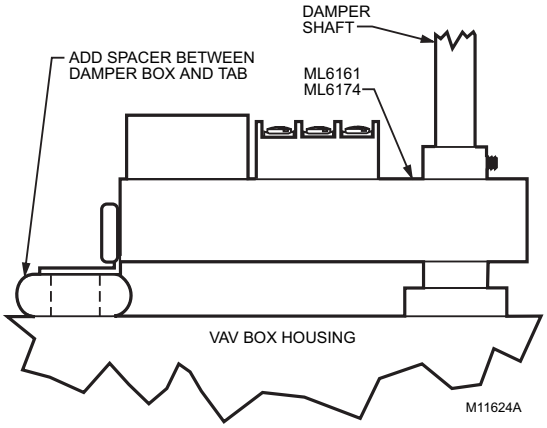

Fig. 2. Mounting actuator to VAV box when actuator is not flush with box.

Preparation

Before mounting the actuator onto the shaft, determine the following:

1. Size of the shaft [3/8 in. to 1/2 in. (10 mm to 13 mm)].
2. Direction the shaft rotates to open the device (cw or ccw). See Fig. 4.
3. Degrees of actuator stroke for opening device (45°, 60°, or 90°).

If the shaft is 3/8 in. (10 mm) round or square, use part number 201391 Shaft Adapter provided inside the bag assembly shipped with the actuator. Place the adapter opposite the setscrews (see Fig. 3).

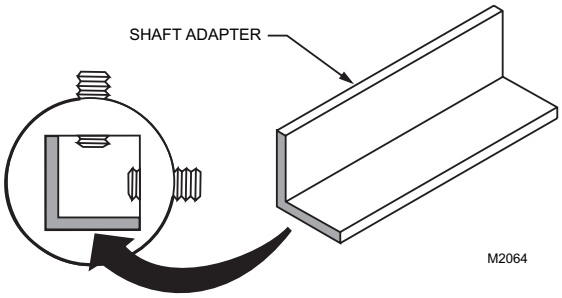

Fig. 3. Using shaft adapter for 3/8 in. (10 mm) shafts.

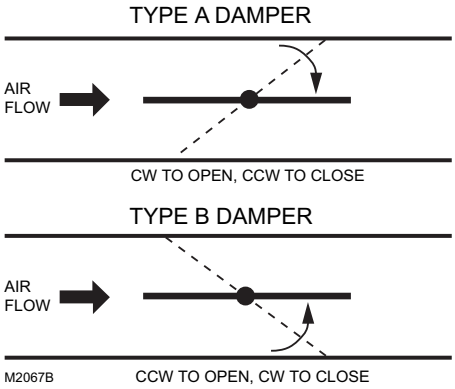

Fig. 4. Determining direction damper shaft rotates when opening.

Manual Operation (Declutch)

⚠ CAUTION

Product Damage Hazard.
Do not use manual declutch without supporting the load.
Support actuator load independently immediately before and during use of manual declutch lever.

Manual declutch capability is available on some actuators. Use the manual declutch lever to manually adjust the actuator setting. Fig. 5 shows the location of the manual declutch lever. To operate, push the lever in the direction of the arrow on the lever cover.

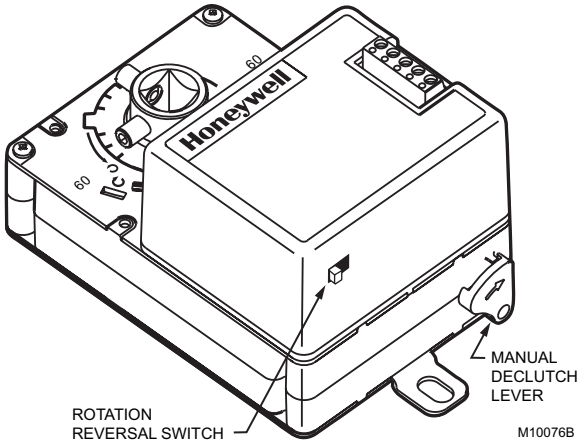

Fig. 5. Location of manual declutch lever.

Installation

After determining the direction of the shaft rotation (cw or ccw), install the device. For valve linkage mounting, refer to the instructions shipped with the linkage. For damper mounting, proceed as follows:

1. Place the actuator onto the damper shaft.

⚠ CAUTION

Equipment Damage Hazard.
Improper range stop selection can damage light-duty dampers.
Be sure to select the proper range stop.

2. If the angle of the damper opening is either 45° or 60°, close the actuator using the manual declutch:
   a. Disengage the hub using the declutch lever; see Manual Operation (Declutch) section.
   b. Rotate the hub until the actuator gear train passes the proper 45° or 60° setting. (Do not insert the pin until after the actuator passes this point.)
   c. Release the declutch lever.

   NOTE: Dampers with 90° stroke do not require the range stop pin.

3. Insert the range stop pin into the appropriate (cw or ccw) 45° or 60° slot. The range stop pin clips into its final position only after the pin passes through both actuator plates (see Fig. 7). The range stop pin should snap into position and not be removable manually (see Fig. 8).

IMPORTANT
Do not fully tighten the mounting screw; the actuator must be allowed to float.

4. With the actuator placed in its final position, fix the mounting tab in position with a 1/4 in. (6 mm) screw or pin. See Fig. 6.
5. Position the damper in the open position and securely tighten the Allen screws into the damper shaft.

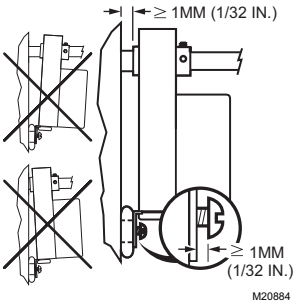

Fig. 6. Proper actuator mounting to prevent rotation.

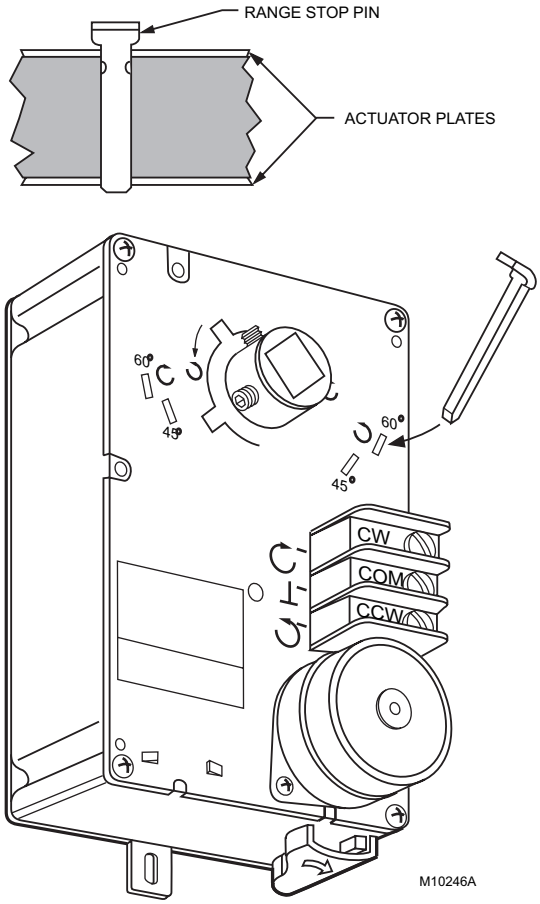

Fig. 7. Range stop pin properly inserted.

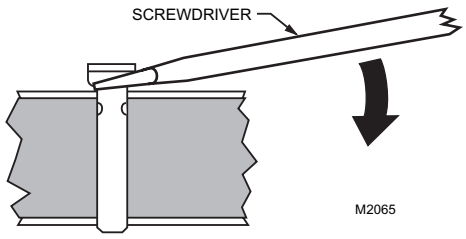

Fig. 8. Lifting range stop pin out of its slot.

Minimum Position Setscrew

Certain ML6161, ML6174 and all ML7161, ML7174 models are equipped with two tapped holes located in the plastic housing at the top of the actuator. These holes can be used with the minimum position setscrew and locknut inside the 4074ENJ Bag Assembly (see Fig. 9). The setscrew provides for a 0° to 30° minimum position adjustment.

NOTE: Before starting operation, note that the 1/4 in. (6 mm) minimum position setscrew limits closing motion, while the range stop pin limits opening motion.

1. Determine the direction of the desired closing rotation.
2. Move the actuator to the position fully opposite the desired closing rotation (if cw closing rotation is desired, move the actuator to the full ccw position).
3. Determine the correct hole for the setscrew using Fig. 9 and the results of step 1.

⚠ CAUTION

Equipment Damage Hazard.
Improper hub positioning or hole selection can permanently damage the device.
Avoid backdriving the actuator with the setscrew.

4. Remove the red cap from the desired hole. Leave the other cap in position. The caps ensure that dust and other impurities do not enter the gear train through unused holes.
5. Thread the locknut fully onto the 1/4 in. (6 mm) setscrew.
6. Insert the setscrew into the desired hole, turning clockwise until resistance is encountered or the locknut contacts the housing.
7. If resistance is met before the setscrew is fully inserted, stop and review the initial setup procedures as detailed in steps 1 through 3.
8. Determine the angle of minimum position required for the application. With the setscrew fully inserted, the minimum position is 30°. With the setscrew fully out, the minimum position is 0°.
9. Using the conversion of approximately 1.7 angular degrees per turn of the setscrew, back the screw out of the housing and stop slightly short of the calculated position. This allows the setscrew to be set accurately while taking air flow measurements.

IMPORTANT

After initiating step 10, the setscrew cannot be turned into the housing without returning the actuator to the fully open position (as determined in step 1). The actuator follows the setscrew without damaging the housing only when backed out of the housing (turned ccw).

10. Rotate the actuator to minimum position using the manual declutch; see Manual Operation (Declutch) section.
11. With the actuator at minimum position, adjust the position more accurately using air flow measurements.

NOTES:

1. After each adjustment, ensure the actuator is completely stopped before proceeding with the next adjustment.
2. To reduce the minimum position, turn out the setscrew (ccw). The actuator then drives toward the closed position.
3. Turning the setscrew in (cw) damages the actuator housing.
4. If the device is too far closed, return to step 1.

12. When proper air flow is achieved, loosen the locknut from the setscrew until it contacts the actuator housing, then turn it an additional 1/8 turn to lock the setscrew in place.

IMPORTANT

Run an entire check of the operation after completing this procedure.

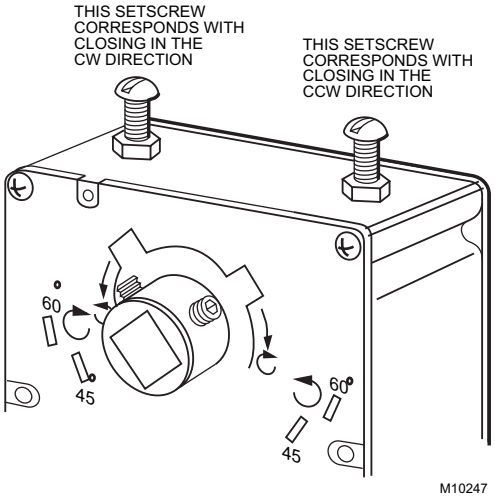

Fig. 9. Setscrew location for ML6161 and ML6174.

Wiring

⚠ CAUTION

Electrical Shock or Equipment Damage Hazard.
Can shock individuals or short equipment circuitry.
Disconnect all power supplies before installation. Actuators with auxiliary switches can have more than one disconnect.

All wiring must comply with local electrical codes, ordinances and regulations. Voltage and frequency of the transformer used with the actuator must correspond with the characteristics of both the power supply and the actuator. Screw terminals are provided for easy hookup. See Figures 11 through 14 for typical wiring hookups.

Connecting Wiring to Conduit Cover Actuators (Fig. 10)

1. Remove the cover from the actuator by lifting the top and pivoting the cover to the rear of the actuator.
2. Remove the conduit knockouts with a flat-bladed screwdriver. Discard the knockouts.
3. Install the conduit connector.
4. Run the connecting wire through the conduit connector, strip the wire ends (if necessary) and connect to the CW, COM and CCW terminals using Figures 11 through 14, Figures 16 through 20, or the control manufacturer instructions.
5. Apply power to the actuator.
6. After operational checkout, replace the cover by reversing the procedure outlined in step 1.

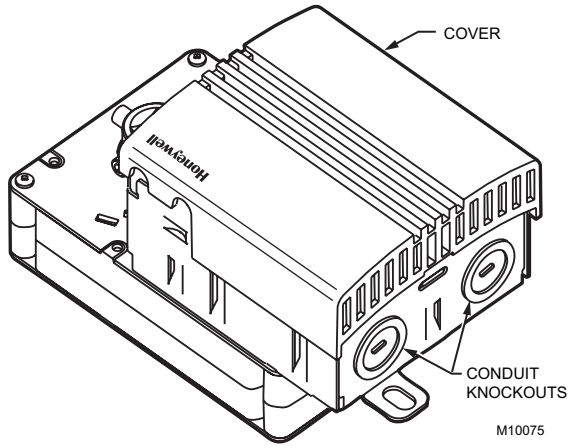

Fig. 10. Conduit cover for ML6161C,D and ML6174C,D DCA.

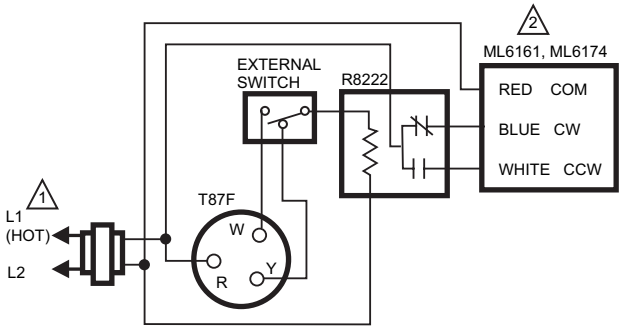

1 POWER SUPPLY. PROVIDE DISCONNECT MEANS AND OVERLOAD PROTECTION AS REQUIRED.

2 AUXILIARY SWITCHES ARE REQUIRED TO TURN OFF THE MOTOR AT EACH END OF THE STROKE.

M18019

Fig. 11. ML6161 or ML6174 used with T87F in heating-only or cooling-only application.

NOTE: See Fig. 12 for the 201052B Auxiliary Switch wiring.

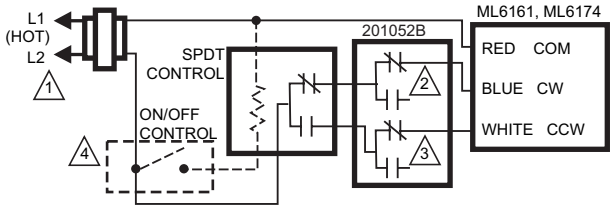

1 POWER SUPPLY. PROVIDE DISCONNECT MEANS AND OVERLOAD PROTECTION AS REQUIRED.

2 SET SWITCH TO CLOSE WHEN STROKE REACHES FULL CW POSITION.

3 SET SWITCH TO CLOSE WHEN STROKE REACHES FULL CCW POSITION.

4 ON-OFF CONTROL REQUIRES AN R8222 SPDT RELAY IN PLACE OF THE SPDT CONTROL.

M17350

Fig. 12. 201052B Auxiliary Switch wiring.

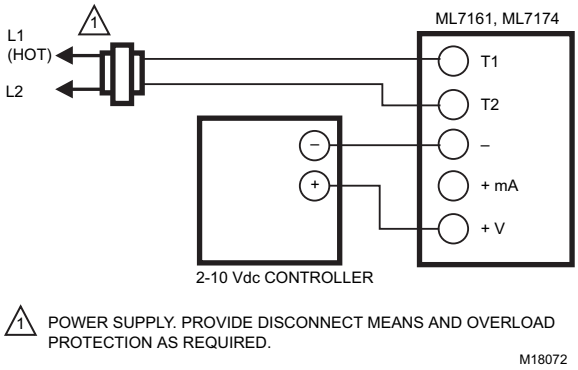

Fig. 13. ML7161 or ML7174 used with 2-10 Vdc control.

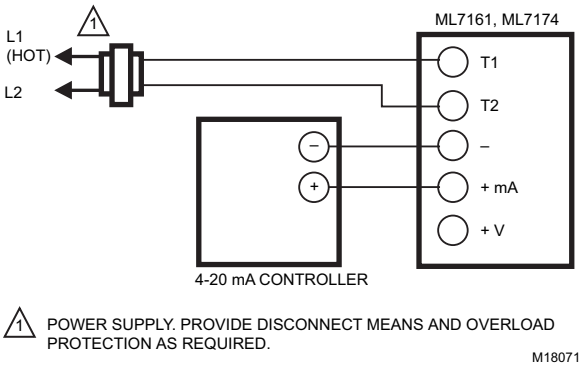

Fig. 14. ML7161 or ML7174 used with 4-20 mA control.

Auxiliary Switches

The 201052A or B Auxiliary Switch is used in conjunction with the actuator. It allows for control of equipment external to the actuator (for example, electric reheat coils and fan) at an adjustable point in the stroke (0° to 90°) of the actuator.

The 201052A and B Auxiliary Switches are field-addable. For mounting instructions, see form 63-2218, provided with the device.

IMPORTANT

When operating an ML6161 or ML6174 from a two-position controller, a 201052B Auxiliary Switch is required for proper operation. See Fig. 12.

Auxiliary Potentiometers

The 200976A,C Auxiliary Potentiometers mount on the face of the ML6161A,C or ML6174A,C (as shown in Fig. 15). The potentiometer shaft has a slipping collar. If one of the two limits of the potentiometer is exceeded, the collar continues to rotate, causing no damage to the potentiometer itself. To mount the potentiometer on the actuator:

1. Turn the potentiometer to align the shaft key with the slot in the potentiometer drive.
2. Tilt the potentiometer slightly so the key faces down toward the slot.
3. Insert the potentiometer into the slot, and push down so the potentiometer is flush with the actuator body and the bracket is aligned over the screw hole.

4. Insert the screw provided into the hole and fasten securely.

IMPORTANT

Failure to follow the calibration procedures can result in improper resistance values at desired stroke.

AUXILIARY POTENTIOMETER

MOTOR POSITION	RW RESISTANCE	RB RESISTANCE
FULLY CW 24V (COM-CW)	0 OHMS	500 OR 2000 OHMS
FULLY CCW 24V (COM-CCW)	500 OR 2000 OHMS	0 OHMS

MOTOR ROTATION	AUXILIARY POTENTIOMETER LEADS	
	RW OHMS	RB OHMS
CCW	INCREASE	DECREASE
CW	DECREASE	INCREASE

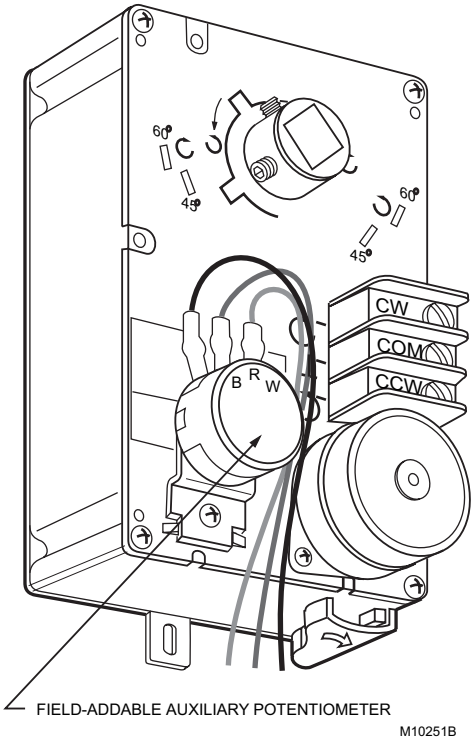

Fig. 15. ML6161A,C, ML6174A,C with field-addable potentiometer.

To Calibrate the 200976A,C:

IMPORTANT

Remove the range stop pins and minimum position setscrews prior to calibration.

1. Drive the actuator fully closed (0°) to fully open (90°) and back again to the fully closed position. This must be done to receive the correct resistance readings at the appropriate degree of stroke.
2. Check the resistance values of the potentiometer with an ohmmeter at intervals in the stroke while referring to the table in Fig. 15 and resistance information provided in the Specifications section.
3. Replace the range stop pins and/or the minimum position setscrews using the appropriate procedures.

OPERATION

VAV Systems

VAV systems control the temperature within a space by varying the volume of supply air temperature. The system delivers air to the space at a fixed temperature. The space thermostat controls the volume of supply air by modulating the supply air damper. When full heating and cooling flexibility is required in a zone, it is handled by the air temperature system, or with reheat capability in the air terminal units. As individual zones shut down, a central duct static pressure controller regulates the total air flow in the system. The fan system is sized to handle an average peak load, not the sum of the individual peaks. As each zone peaks at a different time of day, extra air is borrowed from the off-peak zones. This transfer of air from low-load to high-load zones occurs only in true VAV systems.

In pressure independent systems, individual zone airflow sensors maintain the zone air flow rate independent of fluctuation in the total system pressure. Pressure independent systems, when used with controllers such as the W7620, can react faster to changes in air flow demand; therefore, these systems can use the faster 90-second models.

Pressure dependent systems do not incorporate an individual zone air flow sensor and depend on a stable system pressure to maintain flow. These systems require slower actuators such as the seven-minute models that are typically controlled by spdt floating wall thermostats.

The T641 is a mercury bulb floating-control type thermostat designed for use with the seven-minute model on pressure-dependent systems (see Figures 16 and 17).

The T6984 is an electronic floating-control thermostat designed for use with the 90-second and seven-minute models (see Fig. 18).

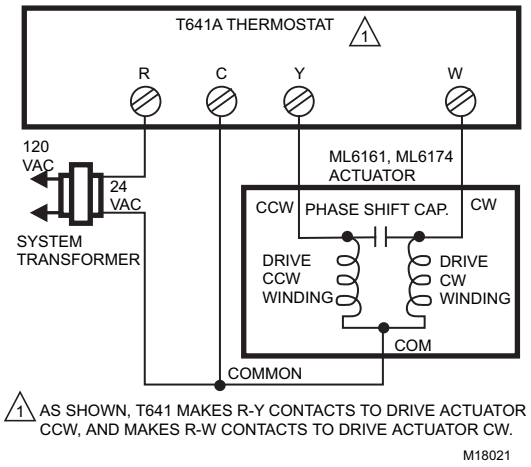

Fig. 16. T641A controlling ML6161 or M6174 Actuator.

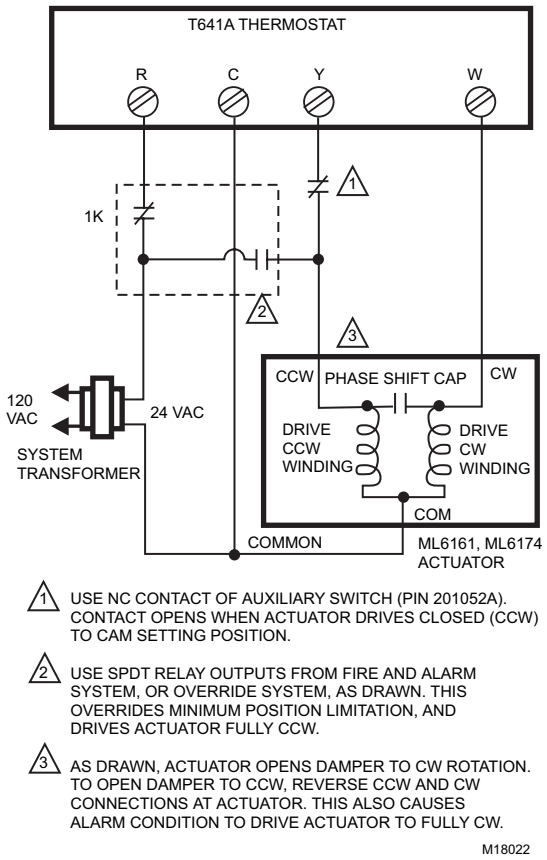

Fig. 17. Minimum position set with auxiliary switch contacts, override provided by fire and alarm contacts.

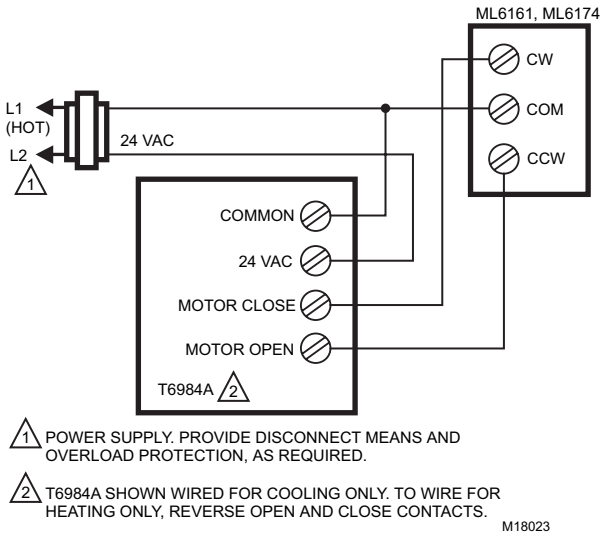

Fig. 18. T6984A controlling ML6161 or ML6174 Actuator for cooling or heating application.

Rotation Reversal Switch (ML7161, ML7174)

Use the rotation reversal slide switch to reverse the actuator rotation. The switch is located on the bottom of the actuator housing (see Fig.5). To change rotation to counterclockwise (ccw) ↶, change the slide switch. In direct, 2 volts is fully ccw and 10 volts is fully clockwise (cw); in reverse, 2 volts is fully cw and 10 volts is fully ccw.

IMPORTANT

When reversing the rotation, make sure the switch is fully to one side or the other. If the switch is left in the middle, the actuator will not operate properly.

Parallel Actuators

IMPORTANT

Over time, parallel-driving actuators can become out of sync with each other. Normally, driving all actuators to the fully-open or fully-closed position puts them back in sync.

ML6161, ML6174 Actuators

Using Fig. 19, parallel the CW, COM and CCW terminals. Make certain the total connected load does not exceed the current capacity of the controller or thermostat.

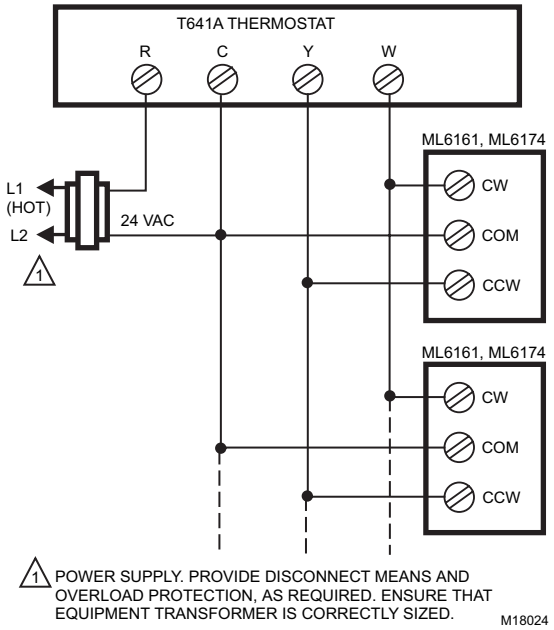

Fig. 19. Spdt control of parallel ML6161 or ML6174 Actuators.

ML7161, ML7174 Actuators

VOLTAGE INPUT (2 TO 10 VDC)

Wire the (+Vdc) and (-) terminals of each actuator in parallel. Make certain the total connected load does not exceed the current capacity of the input signal source.

CURRENT INPUT (4 TO 20 MA)

When using a current controller (such as the W7600), wire the ML7161, ML7174 voltage input terminals (+Vdc) and (-) in parallel. Use a bridging resistor in parallel with the 4 to 20 mA signal. See Fig. 20 for resistor values.

NOTE: The actuator has 45,000 ohm impedance.

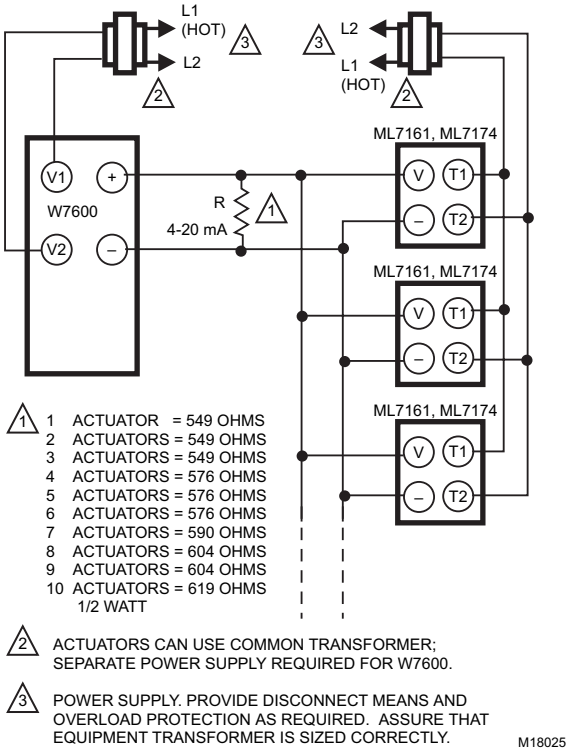

Fig. 20. 4-20 mA signal control of parallel ML7161 or ML7174 Actuators.

CHECKOUT

ML6161, ML6174

To check out ML6161, ML6174 Actuators controlled by electronic control systems, such as the W7620, override the control system by programming the controller to open or close the zone damper, as appropriate.

NOTE: Using a seven-minute actuator results in a longer response time before noticeable damper movement.

To check out the ML6161 or ML6174:

1. Determine the direction the shaft moves to open the device (cw or ccw). See Fig. 3.
2. Place 24 volts across the appropriate common cw or common ccw terminals to energize the actuator. The actuator should begin to open the device.
3. If the actuator does not run, try switching the 24 volts across the opposite common cw or ccw terminals to determine if the device begins to close.
4. If the actuator does not run in either direction, replace the actuator.

For ML6161 or ML6174 issued with a spdt floating wall thermostat (for pressure dependent systems), use the following checkout procedure:

1. Adjust the setpoint of the thermostat to call for cooling.
2. Observe the operation of the actuator; if the device is closed, it should begin to open.
3. If not, adjust the setpoint of the thermostat higher to determine if the wiring is correct.
4. If no movement is observed, check for the presence of 24 volts.
5. If using the T641 Thermostat, check that 24 volts are present between terminals C and Y during a call for cooling. With proper wiring and 24 volts present, the actuator should operate correctly.
6. If not, replace the actuator.

ML7161, ML7174

Check input impedance on the actuator with an ohmmeter.

IMPORTANT

Be sure to disconnect all wiring to the actuator before connecting the ohmmeter.

1. Verify resistance readings are as follows:
   - 45K ohms ±5K ohms, across the (+Vdc) and (-) terminals.
   - 536 ohms ±10 ohms, across the (+mA) and (-) terminals.
2. If the resistance readings are correct, reconnect the actuator and check for 24 Vac at terminals T and T2. With the correct power present at T and T2, check the motion of the shaft/actuator by ramping the setpoint up and down. This causes the actuator to move from one limit to the other and back (from fully ccw to fully cw and back to fully ccw).

   NOTE: Remember that the actuator takes 90 seconds to move from one limit to the other.

3. When the actuator is used with electronic control systems such as the W7600 Commercial Zone System, override the control system by programming the controller to open or close the damper, as appropriate.
4. If the actuator continues to operate incorrectly, check Table 6 for the proper input signal/actuator drive relationship at the (+Vdc) and (-) terminals.
5. If the actuator does not operate according to Table 6 values, replace the actuator.

Table 6. Input Signal/Actuator Drive Relationship.

Input Signal	Actuator Drive Relationship
1.50 ±0.2 Vdc	Actuator drives to extreme ccw position.
2.00 ±0.2 Vdc	Actuator remains at ccw position.
3.00 ±0.2 Vdc	Actuator leaves ccw position.
10.70 ±0.7 Vdc	Actuator drives to extreme cw position.
10.00 ±0.7 Vdc	Actuator remains at cw position.
8.50 ±0.6 Vdc	Actuator leaves cw position.

By using this Honeywell literature, you agree that Honeywell will have no liability for any damages arising out of your use or modification to, the literature. You will defend and indemnify Honeywell, its affiliates and subsidiaries, from and against any liability, cost, or damages, including attorneys' fees, arising out of, or resulting from, any modification to the literature by you.

Automation and Control Solutions

Honeywell International Inc.
1985 Douglas Drive North
Golden Valley, MN 55422
customer.honeywell.com

Honeywell Limited-Honeywell Limitée
35 Dynamic Drive
Toronto, Ontario M1V 4Z9

Honeywell

® U.S. Registered Trademark
© 2006 Honeywell International Inc.
63-2209—9 J.I. Rev. 12-06

Printed in U.S.A. on recycled paper containing at least 10% post-consumer paper fibers.