GENERAFRIO

Honeywell

V5011A-H, J and V5013A-F Valves

SERVICE DATA

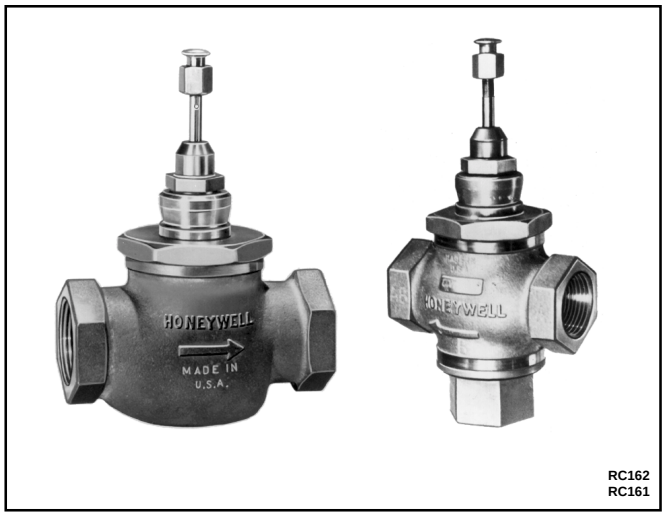

Table of Contents

GENERAL 2
Description 2
Application 2
Specifications 2
Operation 11
Valve Assembly Matrix 16

MAINTENANCE 16
Equipment Required 16
Inspection 16
Cleaning 16
Operational Check 16

REPAIR 16
Equipment Required 16
General 16
Valve Repacking 16
Valve Rebuilding 17
General 17
Disassembly Procedures 17
Stem Button Adjustment 20

PARTS AND ACCESSORIES 21
Parts List 21
Accessories 40

®U.S. Registered Trademark
Copyright © 1997 Honeywell Inc. • All Rights Reserved

77-5613-1

GENERAL

DESCRIPTION

The V5011 are single-seated, two-way, straight-through valves. The V5013 are three-way mixing or diverting valves. Both valves are available in either threaded or flanged patterns.

APPLICATION

The V5011 Valves proportionally control the flow of hot water, chilled water, or steam in HVAC systems requiring tight shutoff. Figure 1 shows average flow characteristics.

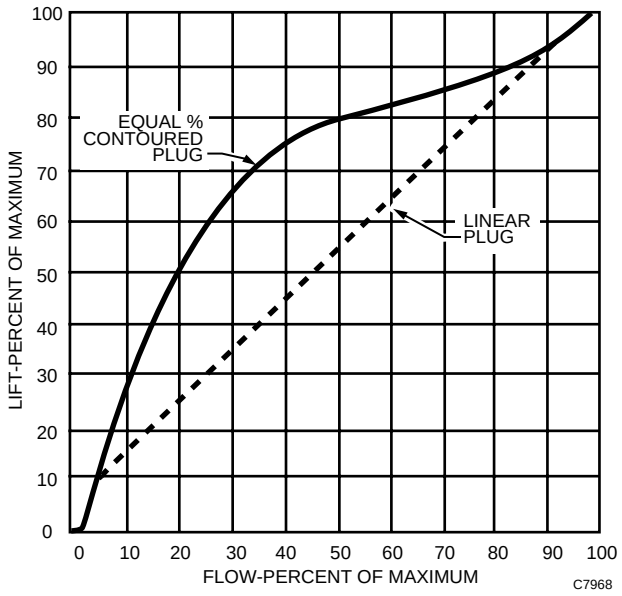

Fig. I. V5011 Average Flow Characteristics.

The V5013 provides proportional or two-position control of hot or chilled water in heating or cooling systems. Models are available for mixing service (directs water flow from either or both inlets to a common outlet) or for diverting service, in 2-1/2 through 8 inch sizes (directs water flow from a common inlet to either or both outlets).

The valves may be used in either a pneumatic or an electric/electronic control system depending upon the choice of the actuator. A properly sized MP953 Pneumatic Valve Actuator or an industrial Type 01-15 or 01-18S Spring Actuator is used in a pneumatic system. A Modutrol motor with either a Q601 or a Q618 Valve Linkage or a Versadrive Actuator is used in an electric/electronic system.

SPECIFICATIONS

Model:
See Table 1 and Figures 2 and 3

Composition Disc Temperature Limits:
See Table 1

Stem Travel:
1/2- to 3-in. valves: 3/4 in. (19 mm)
4-, 5-, and 6-in. valves: 1-1/2 in. (38 mm)
8-in. valves: 2 in. (51 mm)

Recommended Controlled Medium:
See Table 1

Seat:
V5011:
- Threaded bodies—brass (replaceable, threaded into body)
- Threaded bodies—metal-to-metal stainless steel (recommend replacing valve)
- Flanged bodies—bronze (replaceable, threaded into body)

V5013:
- V5013A, F: Integral brass
- V5013B-E: Bronze—removable cage type

Close Off Ratings:
See Table 2 and Figures 4, 5, and 6.

Table 1. V5011 and V5013 Model and Disc Specifications.

Model Number and Plug Characteristic[1]	Action[2]	Pipe Connections	Body Size in Inches	Capacity Index (Cv)[5]	Composition Disc Temperature Range F (C)
V5011A (Inactive) & V5011F Equal Percentage	Direct	Female NPT	1/2	0.4, 0.63, 1.0, 1.6, 2.5, 4.0	35-200 (0-93) 115-275 (46-135)
			3/4	6.3	35-425 (0-218)
V5011C (Inactive) & V5011G Linear[3]			1	10	115-275 (46-135) 275-425 (135-218) 35-425 (0-218)
			1-1/4	16	
			1-1/2	25	
			2	40	
			2-1/2	63	
			3	100	
V5011H Equal Percentage	Reverse	Female NPT	1/2	2.5, 4.0	35-200 (0-93) 115-275 (46-135) 35-425 (0-218)
			3/4	6.3	
			1	10	
V5011J Linear			1-1/4	16	115-275 (46-135) 275-425 (135-218) 35-425 (0-218)
V5011A & V5011D Equal Percentage	Direct	Flanged	2-1/2	63	35-275 (0-135) 35-425 (0-218)
			3	100	
V5011A Equal Percentage	Direct	Flanged	4	160	
			5	250	
V5011B Equal Percentage	Reverse		6	360	
V5011D Equal Percentage High Pressure	Direct				
V5011E Equal Percentage High Pressure	Reverse				
V5013A (Inactive) & V5013F Linear Flow	Mixing	Female NPT	1/2	2.5, 4.0	[4]
			3/4	6.3	
			1	10	
			1-1/4	16	
			1-1/2	25	
			2	40	
V5013A (Inactive), V5013B, & V5013D Linear Flow	Mixing	Flanged	2-1/2	63	
			3	100	
			4	160	
V5013C & V5013E Linear Flow	Diverting		5	250	
			6	360	
			8	600	

[1]For V5011 Valves use Equal Percentage characteristic plug to control water and Linear Characteristic to control steam.

[2]Direct-stem down to close; reverse-stem up to close.

[3] Metal-to-metal seats available in 1/2 to 1-1/2 body sizes.

[4]Metal-to-metal seats are temperature limited by packing only. See Valve Pressure-Temperature Ratings Graph.

[5]0.4 C_V available in V5011F and G only.

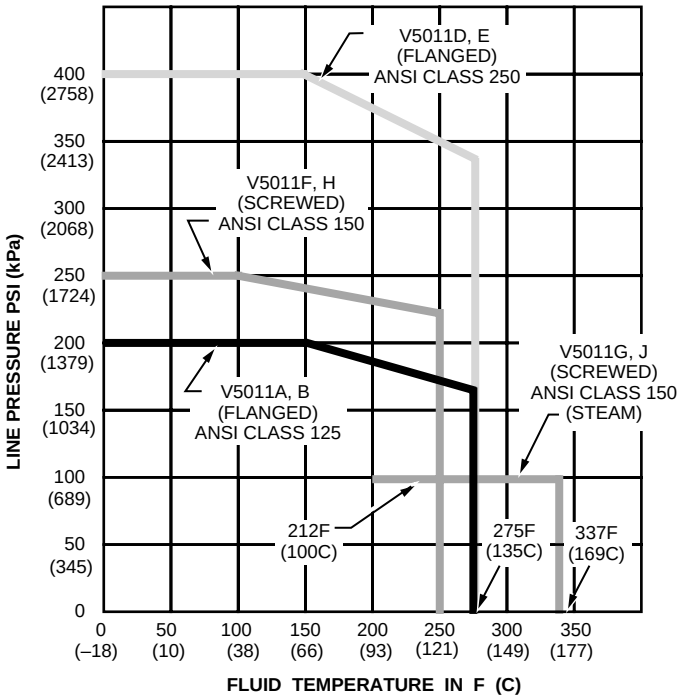

V5011 TWO-WAY VALVE BODY ONLY RATINGS

NOTES:

1. For high fluid temperatures, the valve and/or piping should be insulated to prevent ambient temperature from exceeding actuator ratings.
2. Maximum temperature differential in alternate hot and cold water use, 140F (60C).

C204-6

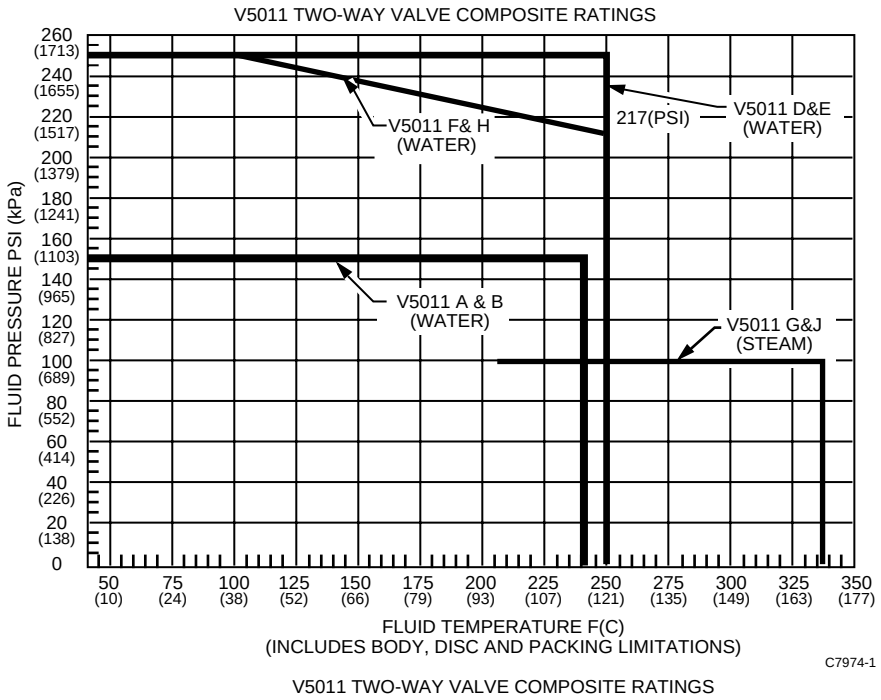

V5011 TWO-WAY VALVE COMPOSITE RATINGS

Fig. 2. Valve Pressure-Temperatue Ratings.

Table 2. Close-Off Ratings for V5011 and V5013 valves with Electric/Electronic and Q618 or Q601 Linkage Actuators.

Model	Close-Off Ratings psi (kPa)		C_V	Size in Inches
	160 lb (712N) LInkage[1]	80 lb (356N) Linkage[2]		
V5011A, C, F, & G Threaded Connections	150 (1034)	150 (1034)	0.40	1/2
			0.63	
			1.0	
		—	1.6	
			2.5	
			4.0	
	150 (1034)	122 (840)	6.3	3/4
	150 (1034)	106 (731)	10.0	1
	141 (970)	60 (414)	16.0	1-1/4
	91 (627)	39 (269)	25.0	1-1/2
	55 (379)	22 (152)	40.0	2
	32 (221)	12 (83)	63.0	2-1/2
	20 (138)	8 (55)	100.0`	3
V5011A & D Flanged Connections	26 (179)	10 (69)	63.0	2-1/2
	20 (138)	7 (48)	100.0	3
	10 (69)[3]	—	160.0	4
	6 (41)[3]	—	250.0	5
	4 (28)[3]	—	360.0	6
V5011B & E Flanged Connections	10 (69)[3]	—	160.0	4
	6 (41)[3]	—	250.0	5
	4 (28)[3]	—	360.0	6
V5011H & J Threaded Connections	150 (1034)	140 (965)	2.5	1/2
	150 (1034)	130 (895)	4.0	1/2
	150 (1034)	120 (830)	6.3	3/4
	150 (1034)	70 (485)	10.0	1
	146 (1005)	50 (345)	16.0	1-1/4
V5013A & F Threaded Connections	150 (1034)	150 (1034)	2.5	1/2
			4.0	
	150 (1034)	120 (830)	6.3	3/4
	150 (1034)	70 (485)	10.0	1
	146 (1007)	50 (345)	16.0	1-1/4
	98 (675)	35 (240)	25.0	1-1/2
	67 (460)	20 (140)	40.0	2
V5013A Flanged Connections	32 (220)	—	63.0	2-1/2
	22 (150)	—	100.0	3
	9 (60)[3]	—	160.0	4
	—	—	250.0	5
	—	—	360.0	6
V5013B, C, D & E Flanged Connections	32 (220)	—	63.0	2-1/2
	22 (150)	—	100.0	3
	9 (60)[3]	—	160.0	4
	—	—	250.0	5
	—	—	360.0	6
	—	—	600.0	8

[1]Seal-Off Force—Q618A (160 lb model); Q601E, J, K.

[2]Seal-Off Force—Q618A (80 lb model); Q601F, G, L, M; Versadrive.

[3]Q601E only.

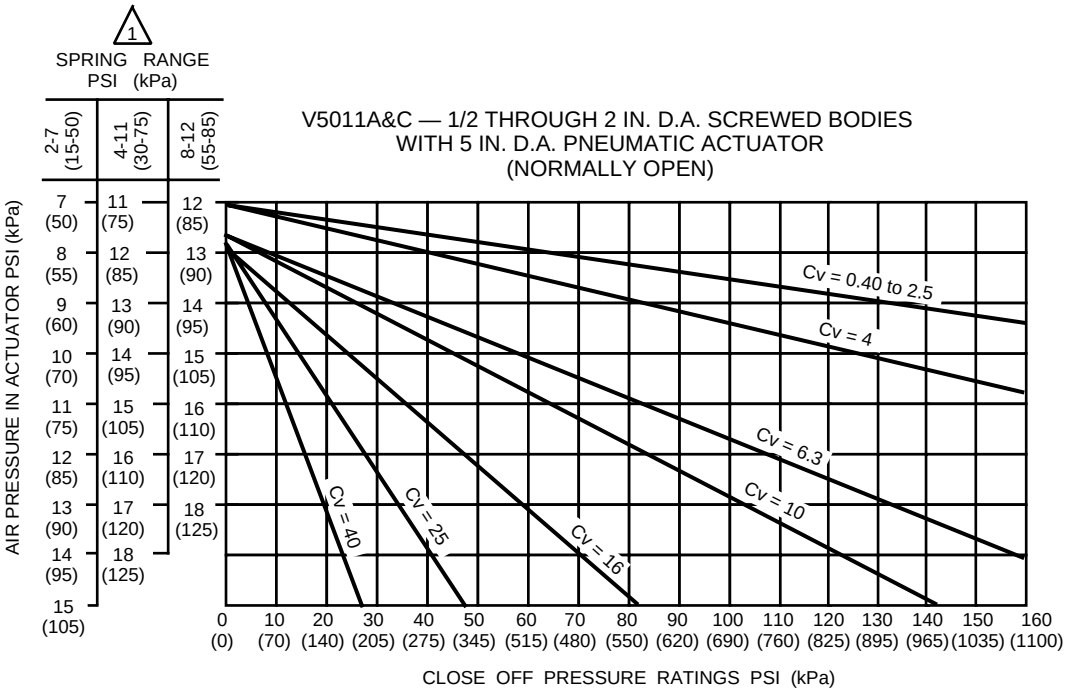

1 USE 4-11 PSI (30-75 kPa) RANGE FOR DETERMINING CLOSE-OFF OF VALVES USED WITH MP953E ACTUATORS.

C7826

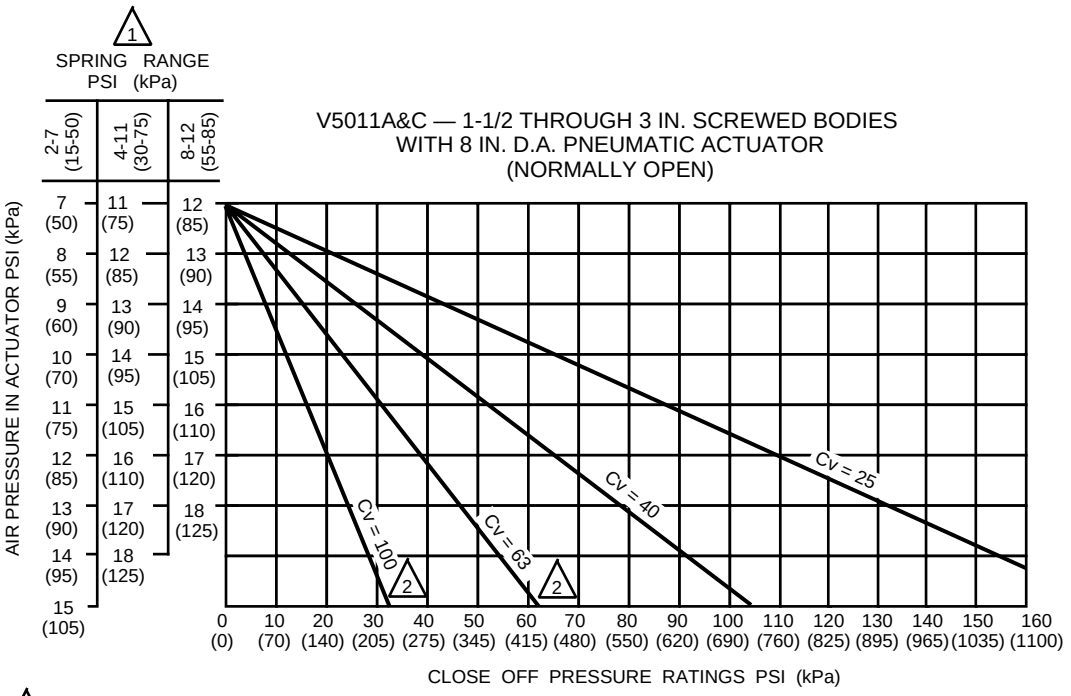

1 USE 4-11 PSI (30-75 kPa) RANGE FOR DETERMINING CLOSE-OFF OF VALVES USED WITH MP953E ACTUATORS.

2 DUE TO DIFFERENCES IN VALVE BODY CONSTRUCTION, SCREWED AND FLANGED PATTERNS HAVE DIFFERENT CLOSE-OFF RATINGS. THIS APPLIES TO 2-1/2 AND 3 IN. VALVE SIZES.

C7827

Fig. 4. V5011 Valves with MP953 Pneumatic Actuators—Close-Off Ratings vs Control Air Pressure.

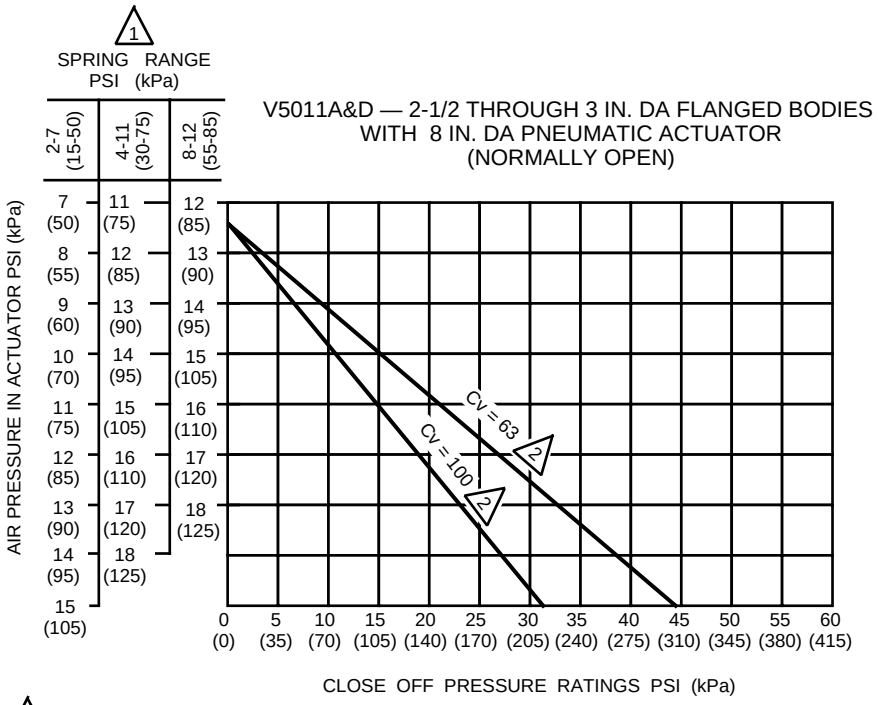

1 USE 4-11 PSI (30-75 kPa) RANGE FOR DETERMINING CLOSE-OFF OF VALVES USED WITH MP953E ACTUATORS.

2 DUE TO DIFFERENCES IN VALVE BODY CONSTRUCTION, SCREWED AND FLANGED PATTERNS HAVE DIFFERENT CLOSE-OFF RATINGS. THIS APPLIES TO 2-1/2 AND 3 IN. VALVE SIZES.

C3123

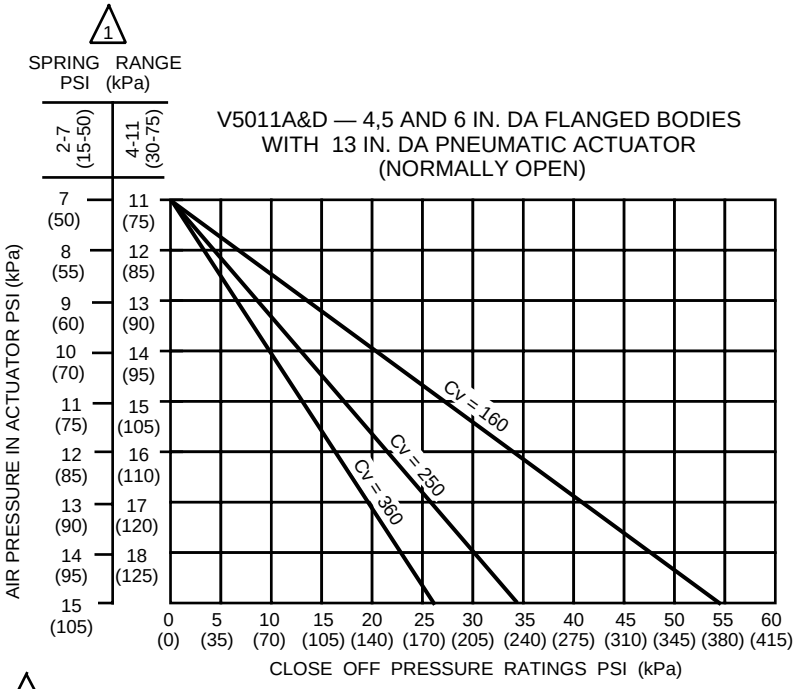

1 USE 4-11 PSI (30-75 kPa) RANGE FOR DETERMINING CLOSE-OFF OF VALVES USED WITH MP953E ACTUATORS.

C3120

Fig. 4. V5011 Valves with MP953 Pneumatic Actuators—Close-Off Ratings vs Control Air Pressure (continued).

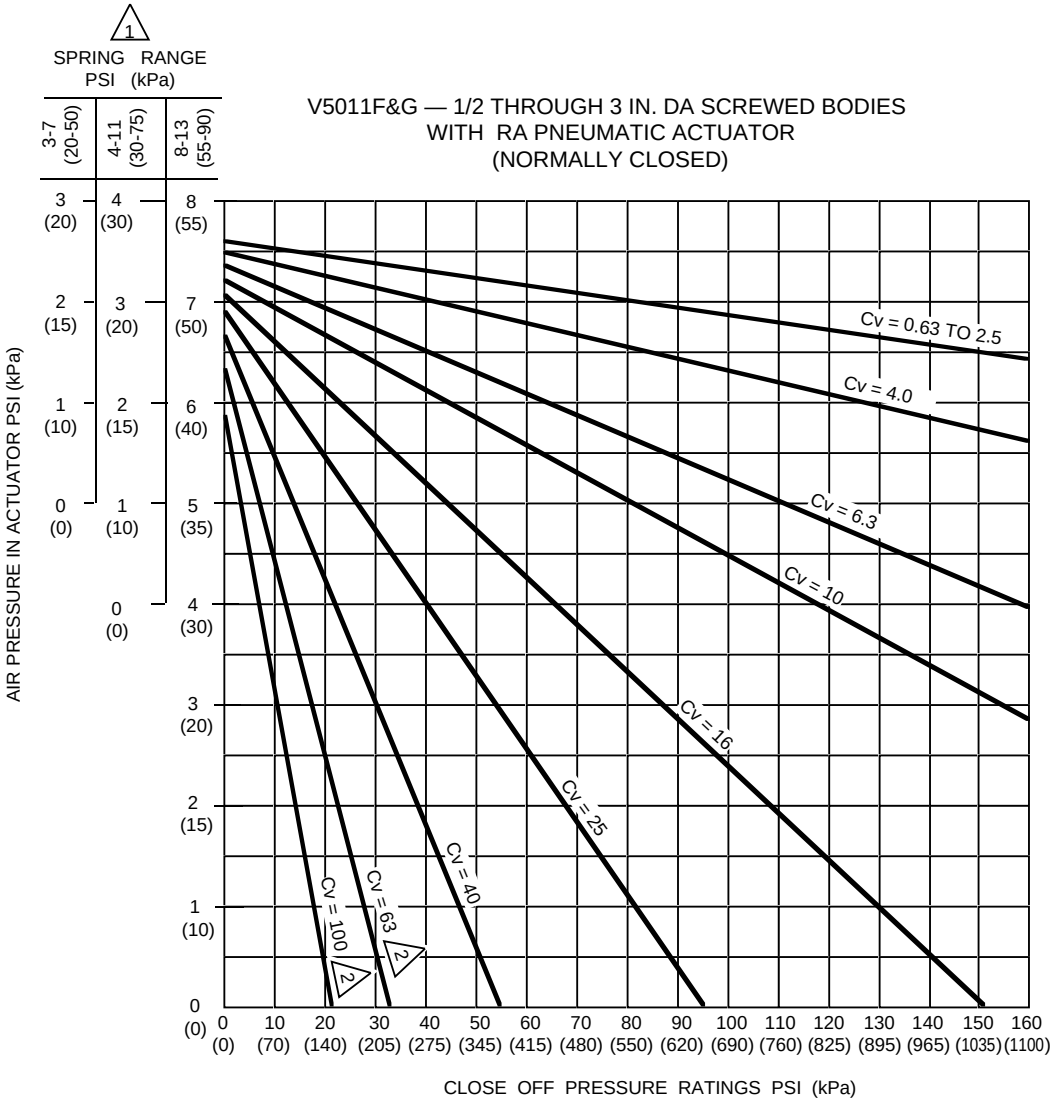

1 USE 8-13 PSI (55-90 kPa) RANGE FOR DETERMINING CLOSE-OFF OF VALVES USED WITH MP953F ACTUATORS.

2 DUE TO DIFFERENCES IN VALVE BODY CONSTRUCTION, SCREWED AND FLANGED PATTERNS HAVE DIFFERENT CLOSE-OFF RATINGS. THIS APPLIES TO 2-1/2 AND 3 IN. VALVE SIZES.

C3125-2

Fig. 4. V5011 Valves with MP953 Pneumatic Actuators—Close-Off Ratings vs Control Air Pressure (continued).

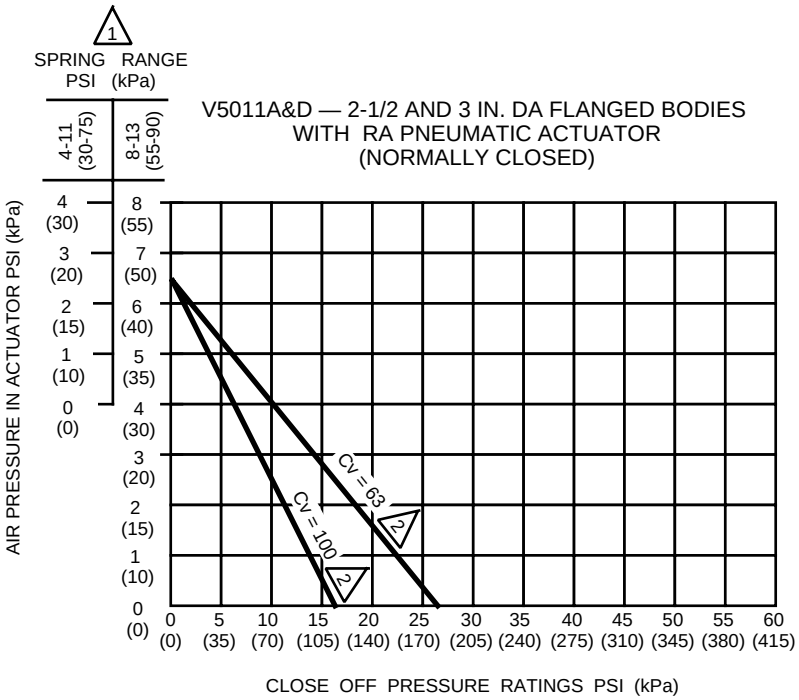

1 USE 8-13 PSI (55-90 kPa) RANGE FOR DETERMINING CLOSE-OFF OF VALVES USED WITH MP953F ACTUATORS.

2 DUE TO DIFFERENCES IN VALVE BODY CONSTRUCTION, SCREWED AND FLANGED PATTERNS HAVE DIFFERENT CLOSE-OFF RATINGS. THIS APPLIES TO 2-1/2 AND 3 IN. VALVE SIZES.

C3124-2

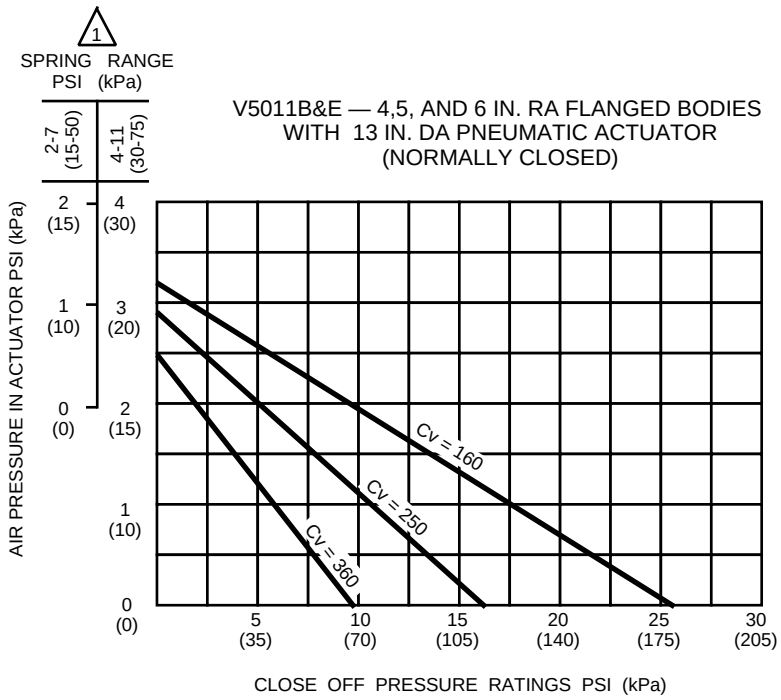

1 USE 4-11 PSI (30-75 kPa) RANGE FOR DETERMINING CLOSE-OFF OF VALVES USED WITH MP953E ACTUATORS.

C3126

Fig. 4. V5011 Valves with MP953 Pneumatic Actuators—Close-Off Ratings vs Control Air Pressure (continued).

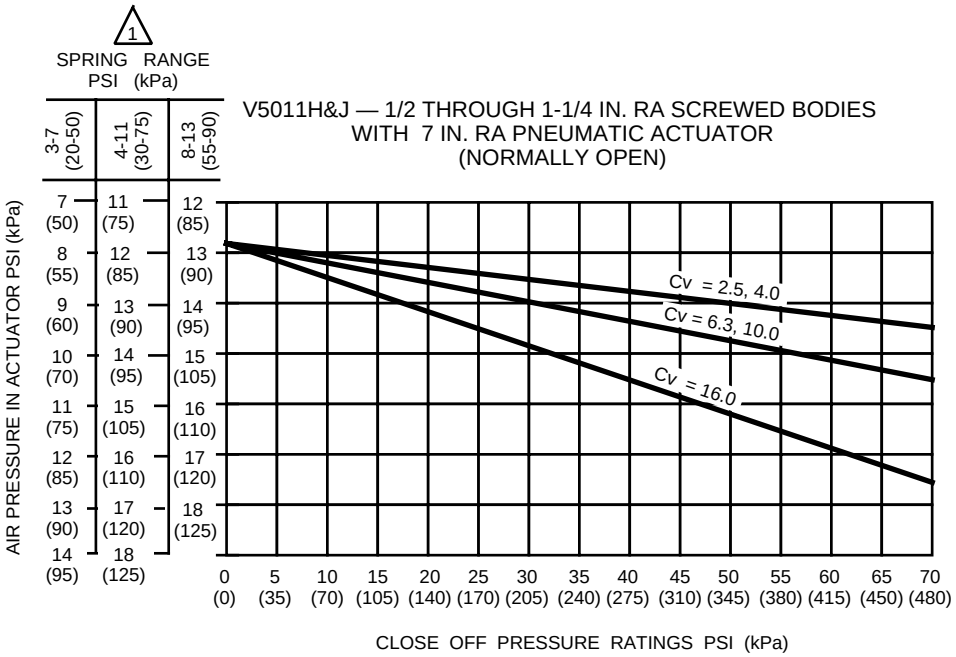

1 USE 8-13 PSI (55-90 kPa) RANGE FOR DETERMINING CLOSE-OFF OF VALVES USED WITH MP953F ACTUATORS.

C1745-2

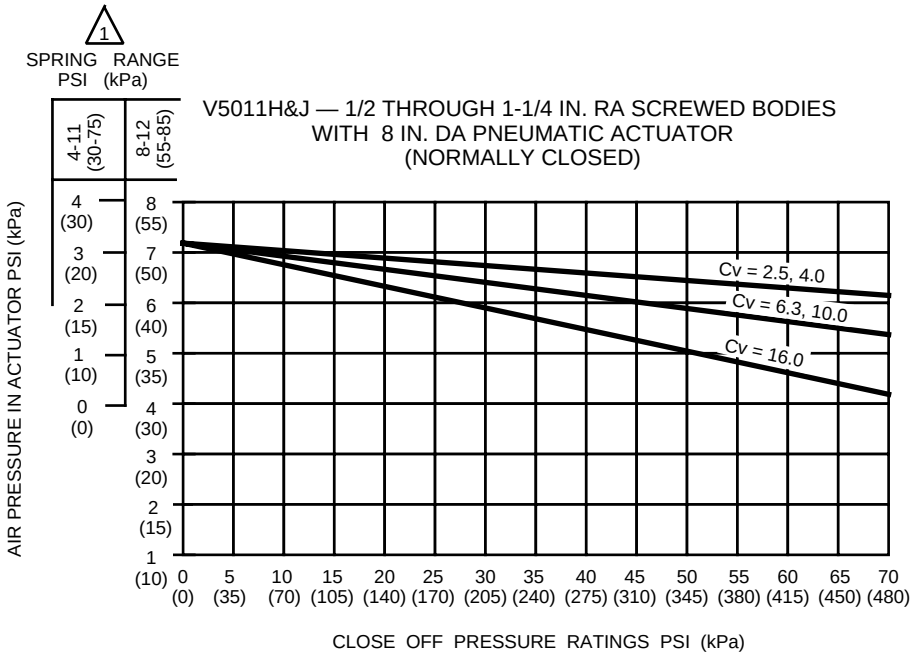

1 USE 4-11 PSI (30-75 kPa) RANGE FOR DETERMINING CLOSE-OFF OF VALVES USED WITH MP953E ACTUATORS.

C1747-3

Fig. 4. V5011 Valves with MP953 Pneumatic Actuators—Close-Off Ratings vs Control Air Pressure (continued).

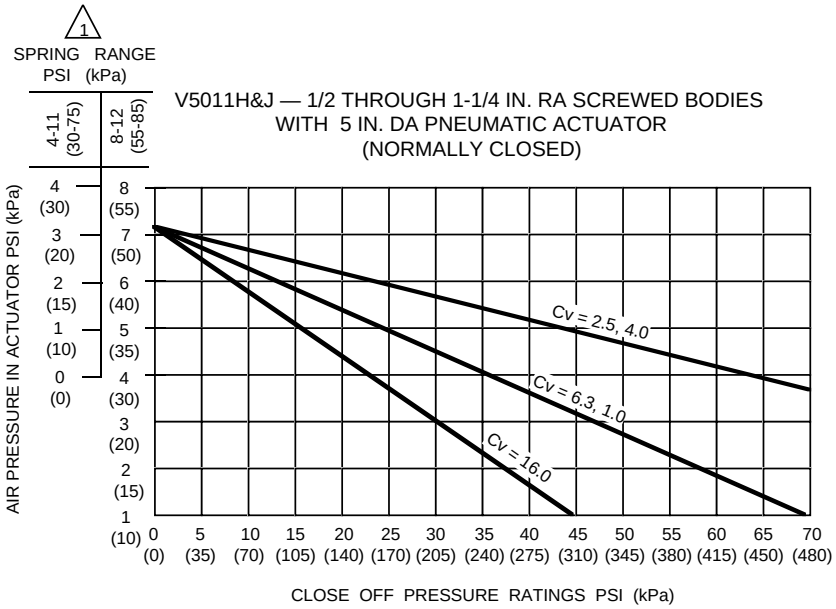

1 USE 4-11 PSI (30-75 kPa) RANGE FOR DETERMINING CLOSE-OFF OF VALVES USED WITH MP953E ACTUATORS.

C1746-3

Fig. 4. V5011 Valves with MP953 Pneumatic Actuators—Close-Off Ratings vs Control Air Pressure.

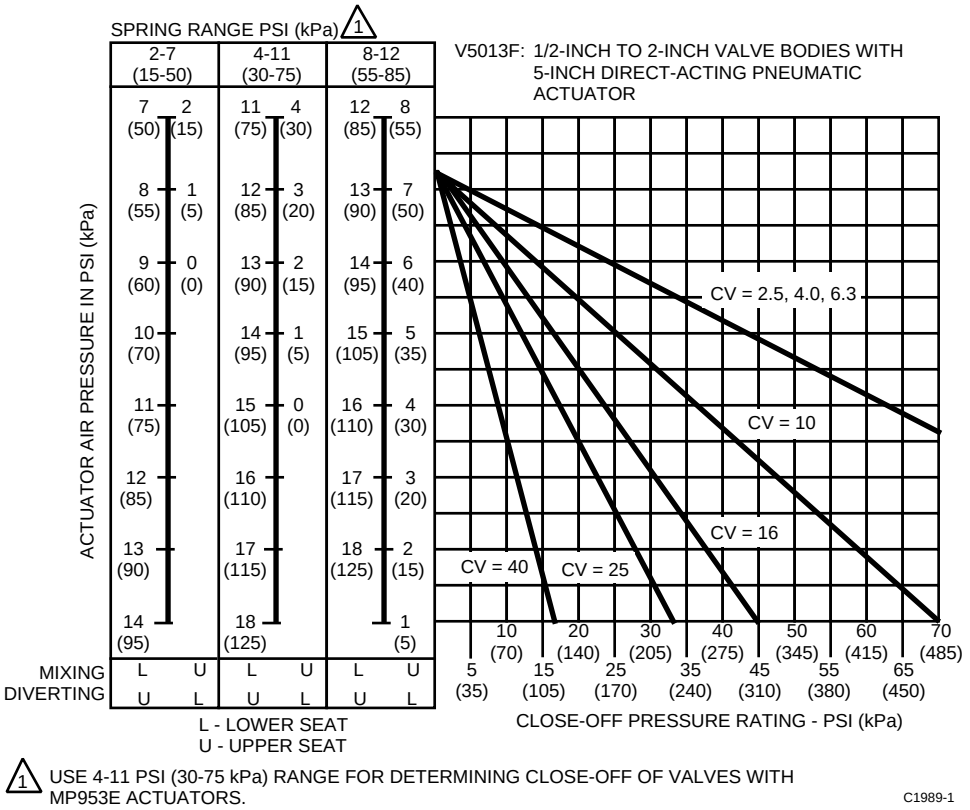

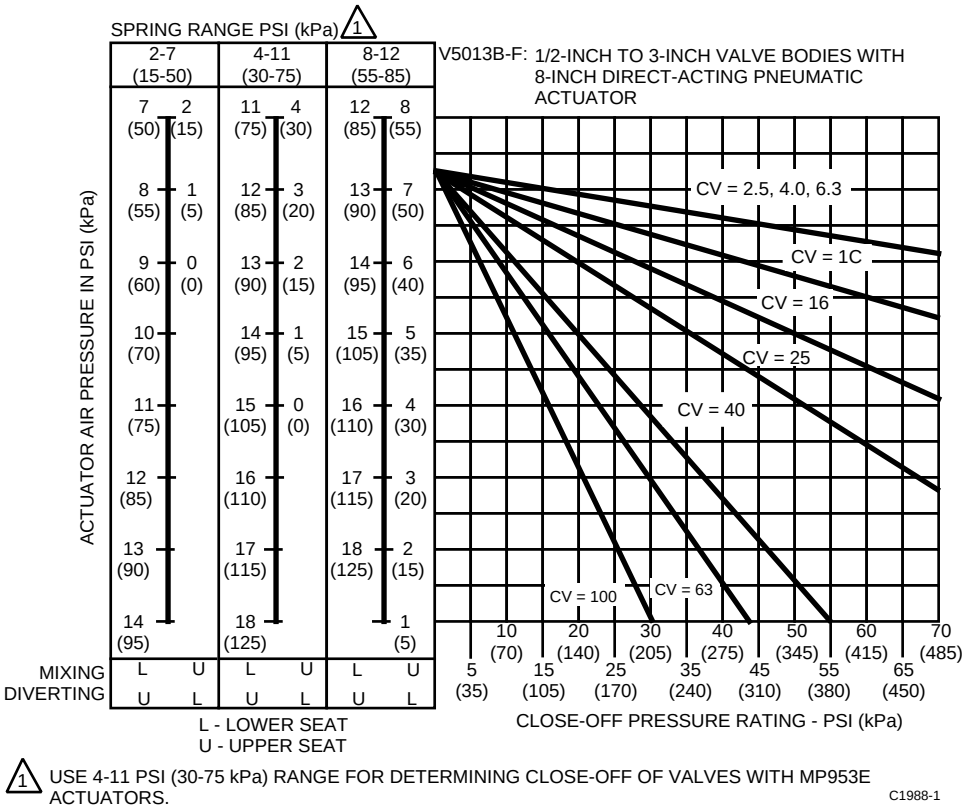

Fig. 5. V5013 Valves with MP953 Pneumatic Actuators—Close-Off Ratings vs Control Air Pressure.

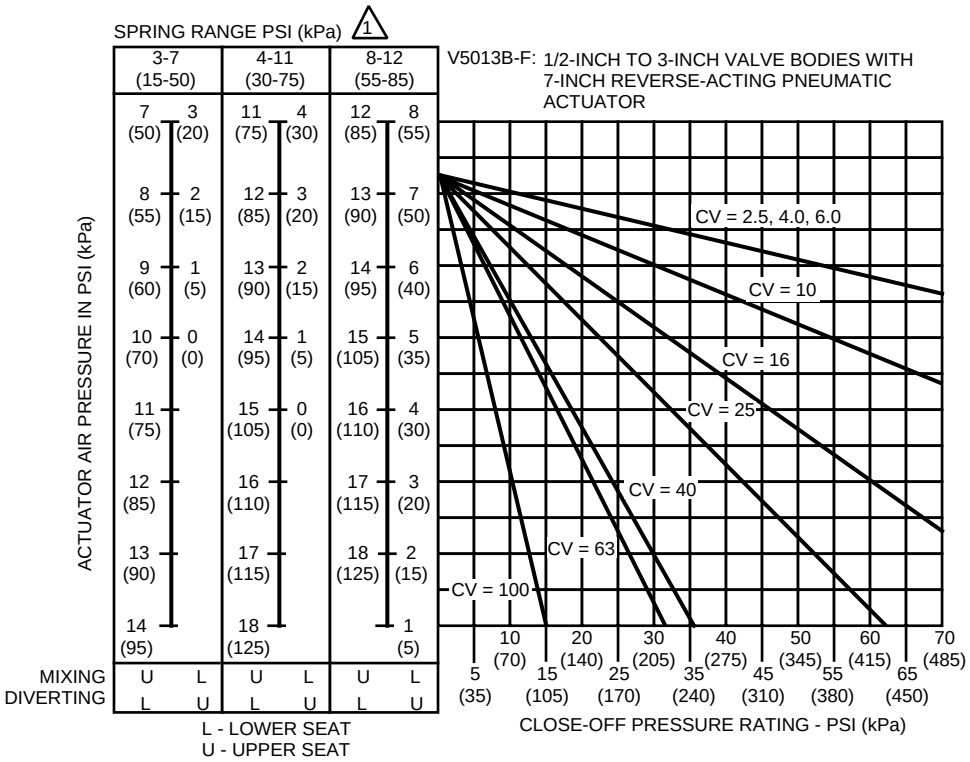

1 USE 8-12 PSI (55-85 kPa) RANGE FOR DETERMINING CLOSE-OFF OF VALVES WITH MP953F ACTUATORS.

C1987-1

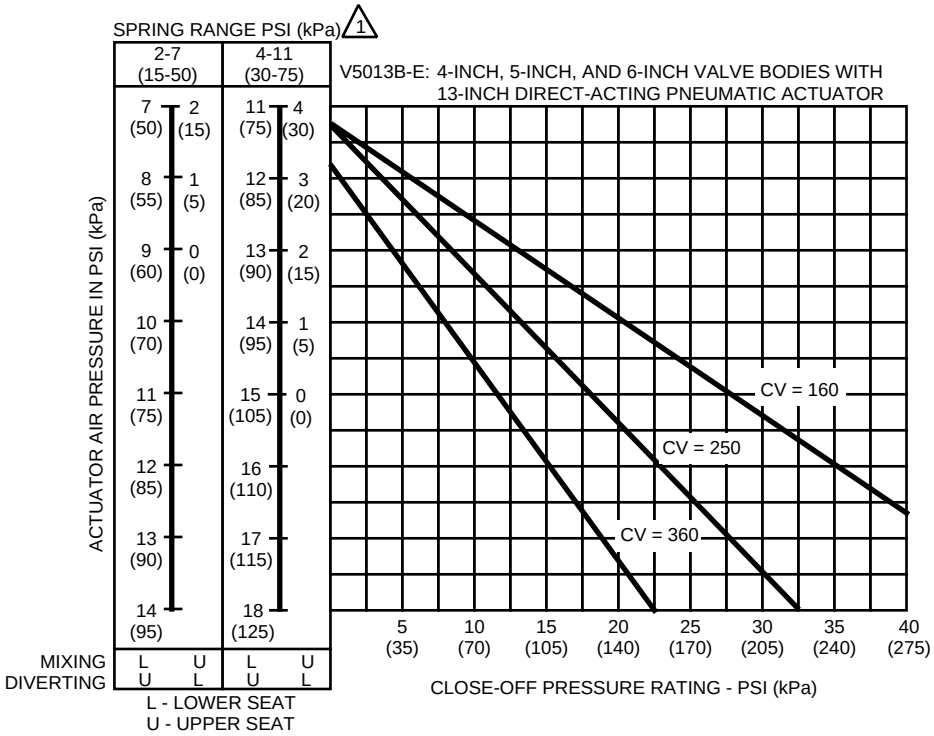

1 USE 4-11 PSI (30-75 kPa) RANGE FOR DETERMINING CLOSE-OFF OF VALVES WITH MP953E ACTUATORS.

C1986

Fig. 5. V5013 Valves with MP953 Pneumatic Actuators—Close-Off Ratings vs Control Air Pressure (continued).

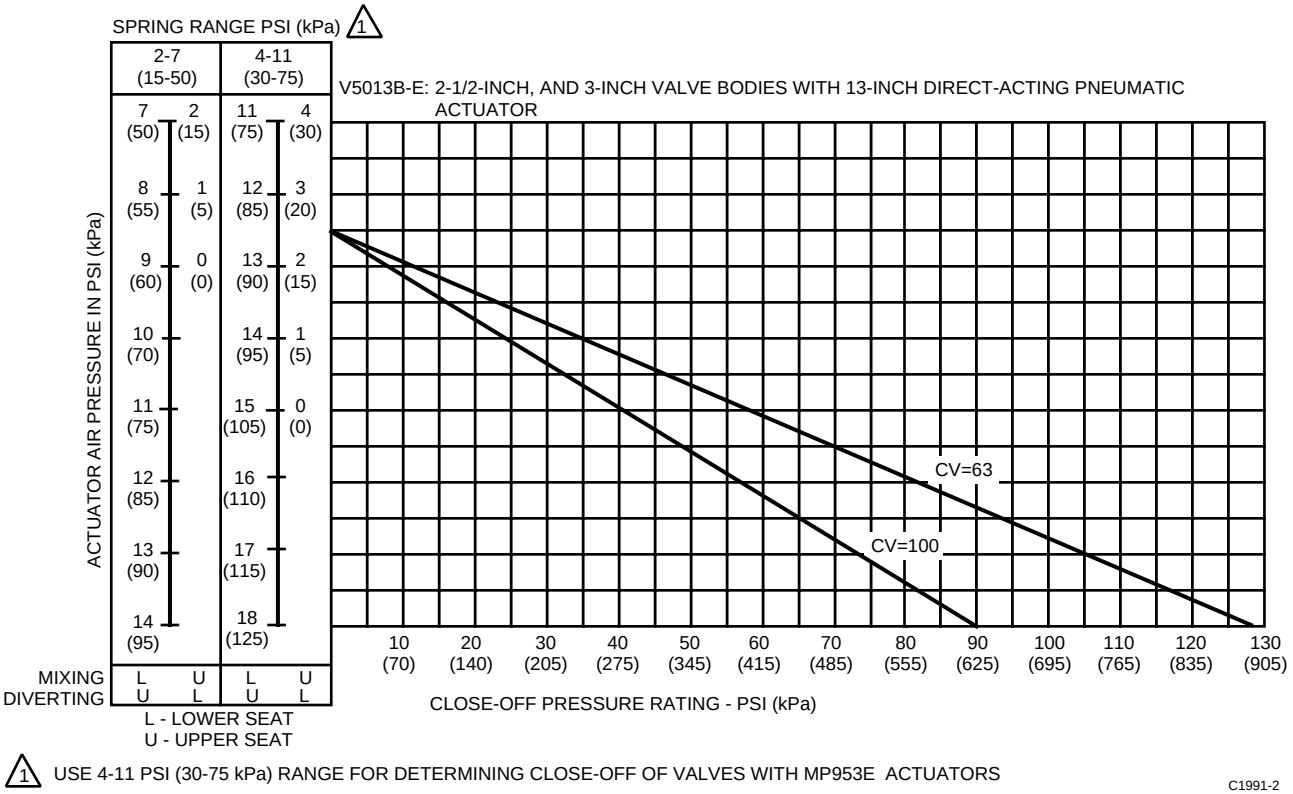

Fig. 5. V5013 Valves with MP953 Pneumatic Actuators—Close-Off Ratings vs Control Air Pressure (continued).

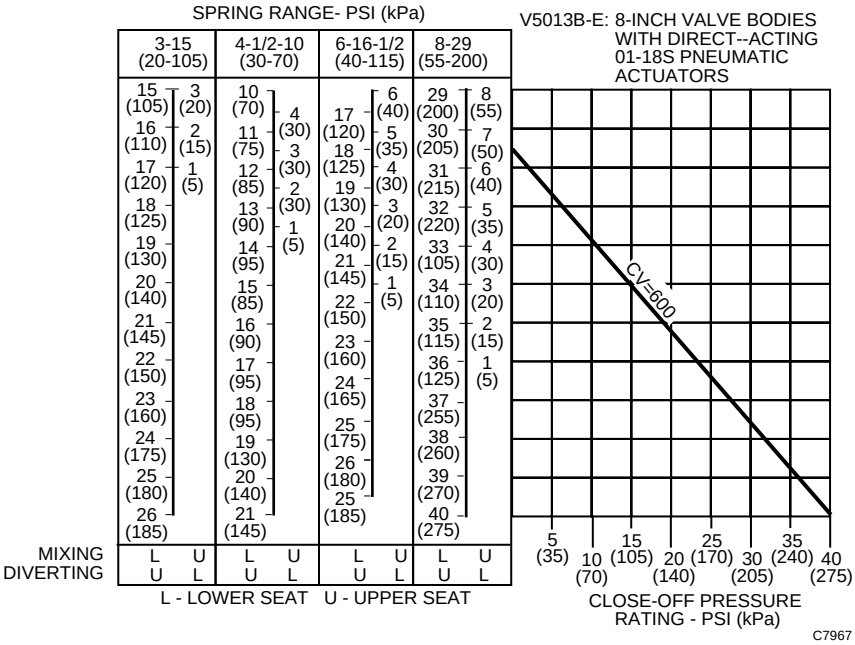

Fig. 6. Close-off pressure at various control air pressures for V5011 valves and MP953 Pneumatic Actuators (continued).

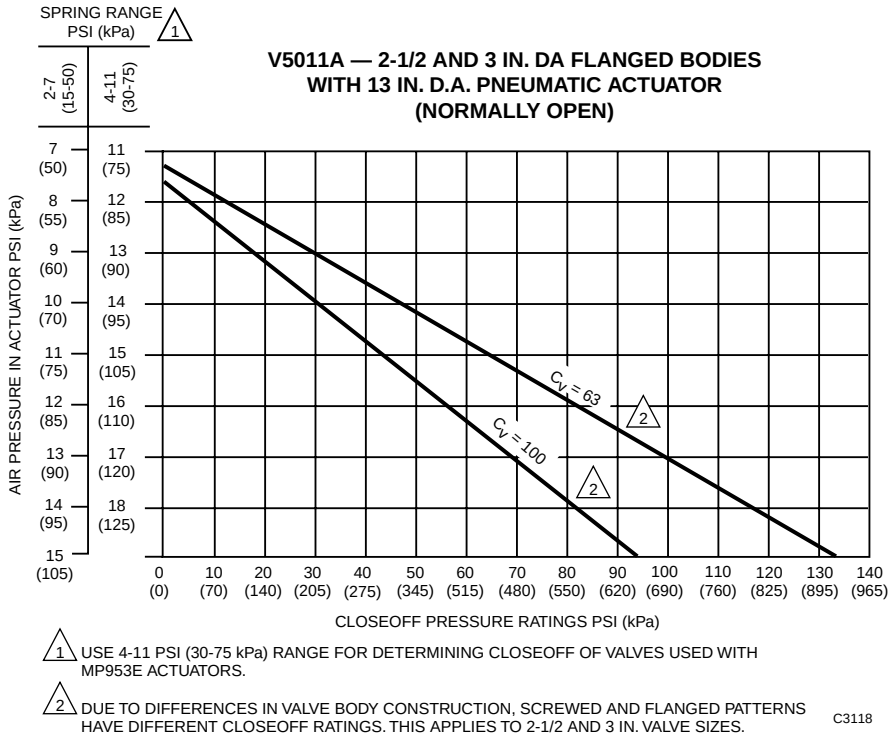

Fig. 6. V5013 8-Inch Valve Bodies with Type 01 Actuators—Close-Off Ratings vs Control Air Pressure (continued).

OPERATION

V5011A-H AND J

In a heating application (usually a normally open valve) (Fig. 7) (or a cooling application [usually a normally closed valve]), a call by the controller for an increase in heat (or cooling), causes the actuator to position the valve stem so that more fluid can pass through the valve (move the disc and plug away from the seat).

V5013A-F

Figure 8 shows a mixing valve. Used in a boiler bypass heating application, Port B is connected to the hot water supply from the boiler, Port A to a bypass from the hot water return line, and Port AB to a load. The actuator moves the stem and the throttling plugs between Ports A and B in response to changes in the load. As the stem moves the plug away from Port A, more of the cooler water from the return is mixed with the water from the supply (Port B) reducing the temperature of the water leaving Port AB. As the stem moves the plug closer to Port A more water from the supply is mixed with the return water increasing the water temperature at Port AB. This provides a constant-volume variable-temperature water supply to the load and a variable volume to the boiler.

When a mixing valve is used in a coil bypass heating application, Port B connects the return from the coil, Port A connects to a bypass from the coil supply, and Port AB connects the return to the system. As the stem moves the plug away from Port A, less water is allowed through the coil and more of the supply water is bypassed back to the return line. This provides a constant-volume through the system and a variable volume through the coil.

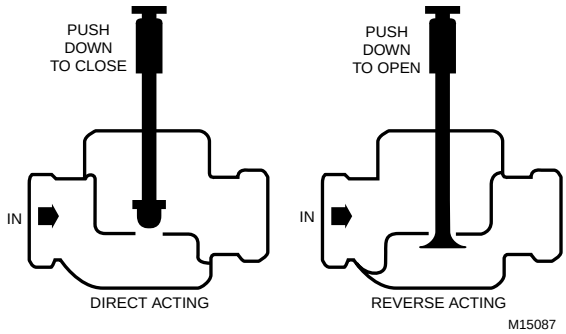

Fig. 7. Typical V5011 Operation.

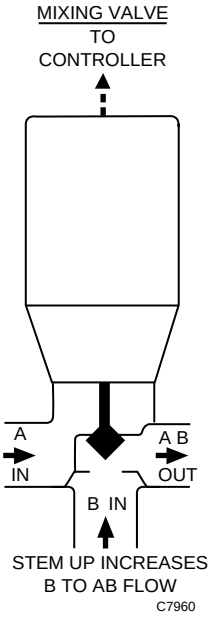

Fig. 8. V5013A, B, D, and F Mixing Valve Operation.

Figure 9 shows a diverting valve in a bypass heating application. Port A is connected to the supply side of the heating coil, Port B is connected to the hot water return (bypassing the coil), and Port AB is connected to the hot water supply. As the stem moves down less hot water is supplied to Port A and more water is diverted to the return. As the stem moves up less water is diverted and more hot water is supplied to the coil. This provides a variable-volume constant-temperature supply to the coil while maintaining a constant volume through the boiler.

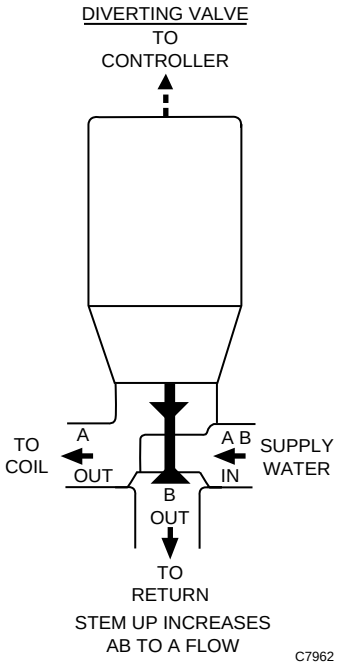

Fig. 9. V5013C and E Diverting Valve Operation.

VALVE ASSEMBLY MATRIX

Use this matrix to identify valves and actuators for systems installed around 1970 when only the valve assembly number is known.

MAINTENANCE

EQUIPMENT REQUIRED

Commercial cleaning solvent or degreaser.

INSPECTION

1. For all body types, inspect top of packing nut around stem. Repack if leakage occurs. Refer to REPAIR section for repacking instructions.
2. For flanged body types, inspect adapter flange, gasket, and body plug. Tighten bolts and/or body plug.

CLEANING

Using solvent, remove all dirt and grease accumulation around the packing nut and stem.

⚠ WARNING

Permanent damage to the respiratory system or skin tissue can result from careless handling of solvents. Special care should be exercised to avoid prolonged inhalation and/or contact with the skin.

OPERATIONAL CHECK

Increase branchline pressure for a direct acting valve and check that the valve closes. Decrease branchline pressure for a reverse acting valve and check that the valve closes.

REPAIR

EQUIPMENT REQUIRED

— Wrench, 1/8 in. Hex, for stem button and setscrew.
— Wrench, seat removal tool for threaded type V5011:

Valve Size	Wrench Size
1/2 in. NPT	Std 7/8 in. thinwall socket
3/4 in. NPT	Std 1 in. thinwall socket
1 in. NPT	Std 1-1/8 in. thinwall socket with O.D. turned down to 1.49 in.
1-1/4 in. NPT	Std 1-3/8 in. thinwall socket
1-1/2 in. NPT	Std 1-5/8 in. thinwall socket
2 in. NPT	Valve seat removal tool MQP947
2-1/2 in. NPT	Valve seat removal tool MQP948
3 in. NPT	Valve seat removal tool MQP949

— Plastilube No. 2 lubricant 311057 for stem and Teflon packing (2 oz. tube).
— Amoco H-100 lubricant 309535 for stem and rubber packing.

GENERAL

If leakage occurs after several years of operation, check stem and seat for wear. If either is worn, completely rebuild the valve, replacing all parts subject to wear. This normally includes replacing packing, stem, disc, internal springs, seats or seat rings, O-rings, and gaskets as applicable to the valve being rebuilt. See PARTS LIST in PARTS AND ACCESSORIES section for repair and rebuild part numbers.

Any valve with a stem that is still in good condition may be repacked without further repair. It is not necessary to remove the bonnet to repack the valve. When repacking, great care should be taken not to damage the valve stem or leakage may still occur after the new packing is installed.

After repairing, use pipe sealing compound or tape on bonnet threads and threaded piping connections. Restore steam or hot water pressure to test for leaks before reinstalling actuator. Remember that pressure forces the valve open during testing when actuator is off. Reinstall the actuator and check operation to be certain valve closes completely against normal operating pressures.

VALVE REPACKING

1. Relieve steam or water pressure from system and remove valve actuator.
2. Hold Stem by inserting 1/16 in. diameter rod or nail in hole near the top of stem. Unscrew Stem Button. Do not tamper with top locking Setscrew in Stem Button. Also remove Stem Extension if applicable.
3. Remove Packing Nut, old Packing, Packing Follower, and Spring. Install new Spring and Packing Follower. Use a small amount of lubricant (see table) and thread new Packing very carefully over the Stem with concave side down for 250 psi (1724 kPa) rubber packing, concave side up for Teflon packing.

Lubricant Table

Model	Valve Size (in.)	Stem Size (in.)	Lubricant
V5011A & F	1/2—1-1/4 1-1/2—3	1/4 3/8	Amaco H-100 Plastilube No. 2
V5011C & G	1/2—3	1/4	Plastilube No. 2
V5011H	1/2—1-1/4	1/4	Amoco H-100
V5011J	1/2—1-1/4	1/4	Plastilube No. 2
V5011A-F	1/2—1-1/4 1-1/2—3	1/4 3/8	Amoco H-100 Plastilube No. 2

4. Reinstall Packing Nut by pushing down to compress Spring until threads engage, and tighten until snug. Be certain the valve stem moves up and down. Reinstall Stem Button, Stem Extension (if applicable), and actuator.

VALVE REBUILDING

GENERAL

Follow DISASSEMBLY PROCEDURES as applicable. Replace all parts subject to wear and damage. Reassemble in reverse order using new parts.

⚠ CAUTION

To prevent stripped threads, do not tighten capscrews on flanged valves beyond recommended torque (Table 3).

Table 3. Bonnet Capscrew Torque.

Screw Size	Recommended Torque lb-ft
7/16-14 UNC	15-25
1/2-13 UNC	30-40
9/16-12 UNC	50-70
5/8-11 UNC	70-100
3/4-10 UNC	120-170

NOTE: Run down all bonnet capscrews until finger tight, then proceed to torque down evenly using a reduced torque. Space successive tightening at 180 degrees, etc, until the bonnet raised face contacts the body on all sides. Then apply torque as specified.

DISASSEMBLY PROCEDURES

1. Relieve steam or water pressure from system and remove actuator.
2. Hold Stem by inserting 1/16 in. diameter rod or nail in hole near top. Remove Stem Extension (if applicable). Partially unscrew setscrew in side of stem button (if applicable). Do not tamper with locking Setscrew in top of Stem Button. Unscrew Stem Button.
3. Remove Packing Nut and all parts down to Bonnet.
4. Remove Stem and Plug.
   a. V5011A, C, F, and G Direct Acting Threaded Body Valves (Fig. 10). Unscrew the Bonnet. Lift out the Stem or Stem and Disc Holder Assembly and the Plug.
   b. V5011H and J Reverse Acting Threaded Body Valves (Fig. 11). Unscrew cap outlet from body and remove Stem and Plug.
   c. V5013A Threaded Body Valves (Fig. 12). Remove valve from line. Unscrew the inlet (lower port) from body and remove Stem and Plug.
   d. V5011A and D Direct Acting Flanged Body Valves (Fig. 13). Remove the Bonnet Mounting Screws and Bonnet (and Adapter Flange in older valves). Lift out the Stem and Plug.
   e. V5011B and E Reverse Acting Flanged Body Valves (Fig. 14). Unscrew the Bonnet. Remove the Adapter Flange at the bottom of the valve by unscrewing the Mounting Screws. Remove the Stem and Plug.
   f. V5013A Flanged Body Valves (Fig. 15). Remove valve from line. Unscrew the Bonnet. Remove Cap Screws then the Lower Seat Outlet with Lower Seat Ring. Remove Stem and Plug.
   g. V5013B-E Flanged Body Valves (Fig. 16). Remove mounting screws and detach the Bonnet. Unscrew the Upper Seat Ring and lift out Stem and Plug. Remove the Lower Seat Ring through the bonnet opening.

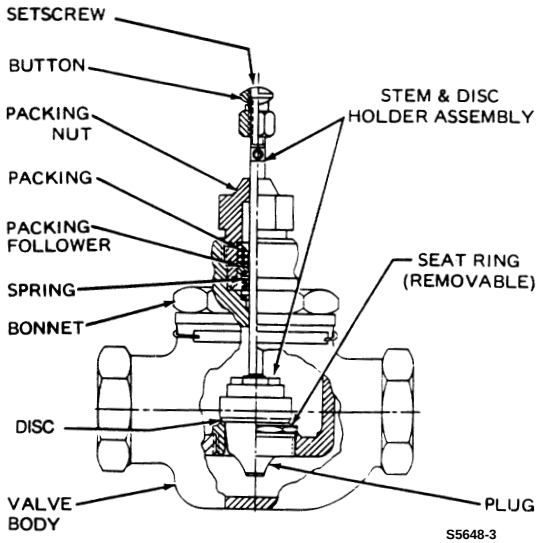

Fig. 10. V5011A, C, F, and G Direct Acting Threaded Body Valve—Cutaway.

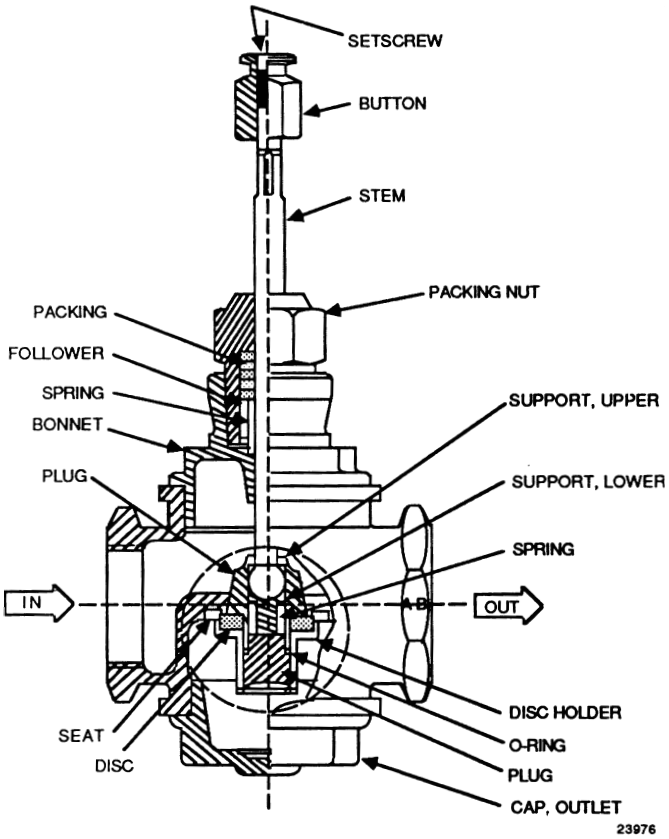

Fig. 11. V5011H and J Reverse Acting Threaded Body Valve—Cutaway.

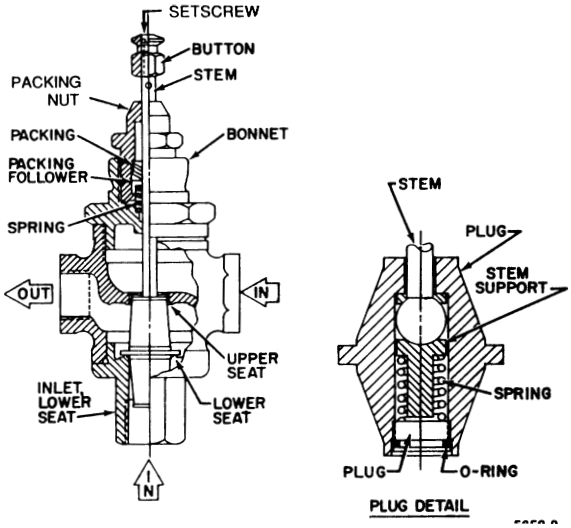

Fig. 12. Three-Way V5013A Threaded Body Valve—Cutaway.

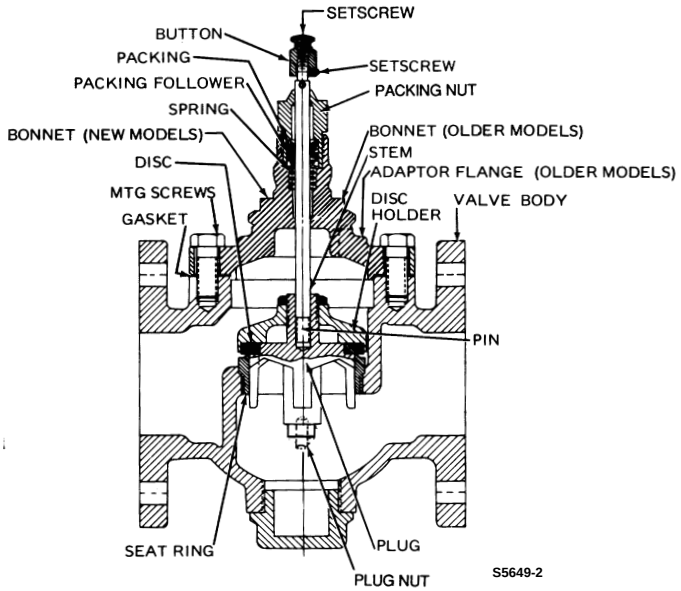

Fig. 13. V5011A and D Direct Acting Flanged Body Valve—Cutaway.

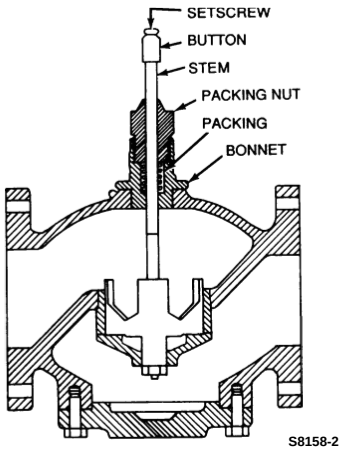

Fig. 14. V5011B and E Reverse Acting Flanged Body Valve—Cutaway.

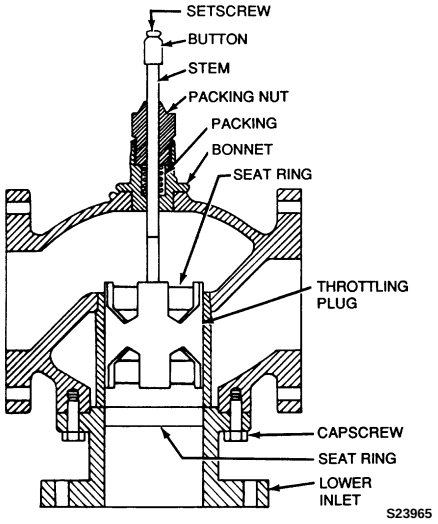

Fig. 15. Three-Way V5013A Flanged Body Valve—Cutaway.

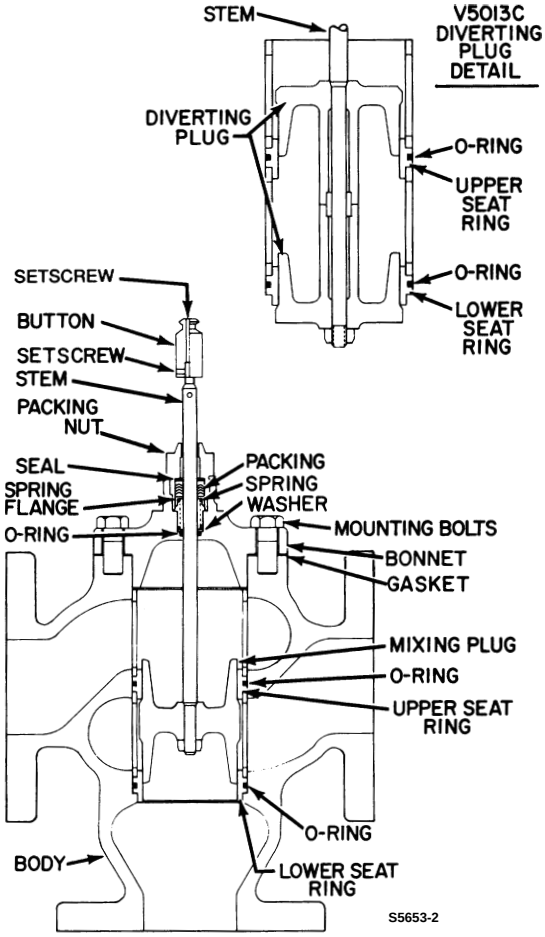

Fig. 16. Three-Way V5013B-E Flanged Body Valve—Cutaway.

5. Disassemble Stem and Plug.
   a. V5011 Threaded Body Valves. Unscrew Plug (Fig. 10) from Stem to remove Disc and Spring. The Disc may have to be pried from the Disc Holder with a screwdriver. Valves that are 1-1/2 inch or larger have separate Stem and Disc Holder. Smaller valves have a staked Stem and Disc Holder Assembly (Fig. 17). The Stem and Plug cannot be disassembled on some valves with metal-to-metal seats (V5011C1524 through V5011C1623).
   b. V5013A and F Threaded Body Valves (Fig. 12). Remove the lower Plug and O-ring from Throttling Plug with screwdriver, thereby releasing Stem Support and Spring. To reassemble, tighten lower Plug against Stem Support and back off 1/4 turn.
   c. V5011 Flanged Body Valves (Fig. 13). Remove the Plug Nut to release Disc Holder and Disc. Detach the Stem by removing Pin.
   d. V5013 Flanged Body Valves (Fig. 15). On V5013A, remove Pin and detach the stem from Throttling Plug. On V5013B-E (Fig. 16), remove Plug Nut and detach the Plug.

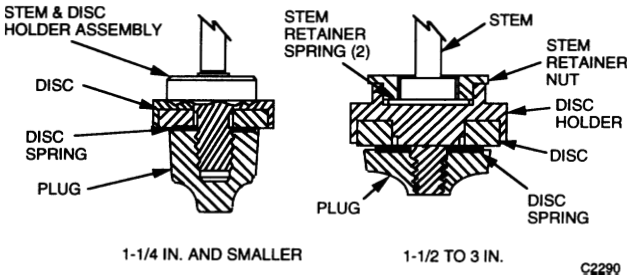

Fig. 17. Disc Holder Assemblies Used in V5011A Threaded Body Valves.

STEM BUTTON ADJUSTMENT

If top setscrew was not removed or turned, the Stem Button (Fig. 18) probably will not have to be adjusted. If adjustment is necessary, check and adjust to the dimension listed in Table 4.

1. Loosen top Setscrew and side setscrew (if applicable).
2. Adjust Stem Button to proper dimension.
3. Tighten top Setscrew and side setscrew (if applicable).

Table 4. Stem Button Adjustment Dimensions (Fig. 18).

Valve Description	Dimensions in Inches (mm)				Stem Position
	Factory Setting w/o Stem Extension	5 in. Actuator (1/2 to 2 in. Valves)	8 in. Actuator (1-1/2 to 3 in. Valves)	13 in. Actuator (4 to 6 in. Valves)	
V5011A, C, F, & G					
1/2 to 3 in. Threaded	3-17/32 (90)	3-17/32 (90)	5-9/32 (134)	—	Down
2-1/2 to 3 in. Threaded (1-1/2 in. Travel)	4-17/32 (115)	—	—	7-9/16 (192)	Down
2-1/2 to 3 in. Flanged	4-17/32 (115)	—	5-9/32 (134)	—	Down
4 to 6 in. Flanged	5-7/32 (132)	—	—	7-9/16 (192)	Down
V5011B , 4 to 6 in.	6-23/32 (171)	—	—	8-15/16 (227)	Up
V5011D, 4 to 6 in.	5-7/32 (132)	—	—	7-9/16 (192)	Down
V5011E, 4 to 6 in.	6-23/32 (171)	—	—	8-15/16 (227)	Up
V5011J & H					
1/2 to 1-1/4 in.	4-7/32 (107)	4-7/32 (107)	—	—	Up
V5013A & F					
1/2 to 2 in. Threaded	4-7/32 (107)	4-7/32 (107)	—	—	Up
V5013A, B, C, D, E					
2-1/2 to 3 in. Flanged	3-15/32 (88)	—	5-7/32 (133)	—	Down
4- to 6 in. Flanged	5-7/32 (132)	—	—	7-9/16 (192)|	Down
8 in. Ïlanged	4-5/8 (117)	—	—	—	Down

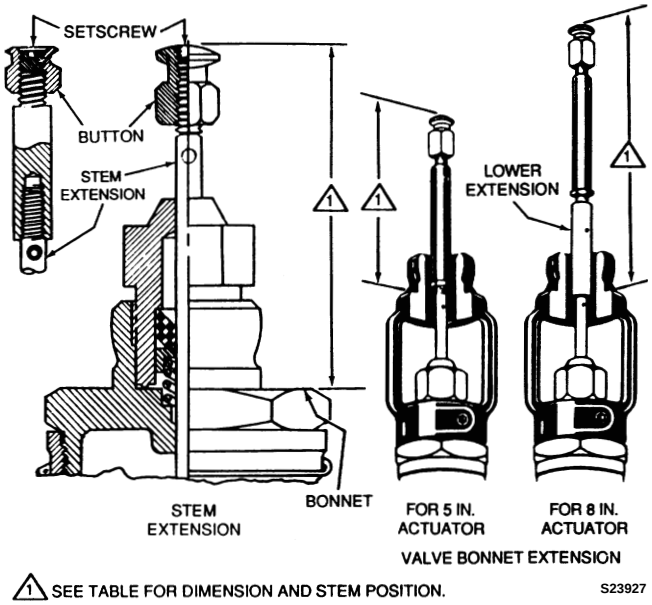

Fig. 18. Stem Button Adjustment. See Table 4.

PARTS AND ACCESSORIES

PARTS LIST

See Figures 19 through 25 and Tables 6 through 12 for V5011 and V5013 replacement parts. Repack Kits, Rebuild Kits, and Repair Assemblies are listed at the end of the section. All 30,000,000 part numbers must be ordered from Process Control Division in Ft. Washington, Pennsylvania, or their local Branch representatives.

V5011 Equal Percentage Threaded Valves may be any one of four variations, old 150 psi, old 250 psi, interim 250 psi, and current 250 psi. V5011 Linear Threaded Valves and V5013 Threaded Valves may be any one of three variations, old 150 psi, interim 250 psi, and current 250 psi (Table 5).

Table 5. Valve Body/Packing Pressure Ratings.

Description	Old 150 psi[1]	Old 250 psi	Interim 250 psi	Current 250 psi
Model Number	V5011A1007-1528 V5011A5974, V5011A6352,[2] V5011A6361-6471	V5011A6972-6980, V5011A7111-7160	V5011A7202-7467	V5011F1006-1261
Bonnet	6-Sided	6-Sided	8-Sided	8-Sided
Disc Ratings available	35 to 200F 115 to 275F 275 to 425F	115 to 275F	35 to 425F	35 to 425F
Model Number	V5011C1003-1516, V5t011C1698, 1714	N/A	V5011C2159-2399	V5011G1004-1244
Bonnet	6-Sided		8-Sided	8-Sided
Disc Ratings available	35 to 200F 115 to 275F		35 to 425F	35 to 425F
Model Number	V5013A1005-1625	V5013A6004-6038	V5013A1633-1823	V5013F1004-1194
Bonnet	6-Sided	6-Sided	8-Sided	8-Sided
Disc Ratings Available	35 to 200F 115 to 275F	35 to 200F 115 to 275F	35 to 425F	35 to 425F

[1]May have been upgraded to 250 psi rating. Upgraded versions will have rubber packing.
[2]Special with rubber packing for New York City code.

Table 6. V5011A, C, F, and G Direct Acting Threaded Body Valve (Fig. 19)—Parts List.

Key No.	Part No.	Valve Size in Inches	Cv	Description
1	—	—	—	Setscrew, Socket Head 1/4-28 x 1/4 in.
2	310503-062	1/2 thru 3	—	Button, Old 150 & 250 lb.
	14004623-001			Interim & V5011F, G
3	310509	1/2 thru 1-1/4	—	Packing Nut, Old 150 lb and V5011C & G
	311431	1-1/2 thru 3	—	Old 150 lb.
	30683374-002	1-1/2 & 2	—	Old 250 lb.
	14004620-001	1/2 thru 1-1/4	—	V5011A interim & V5011F
	14004552-001	1-1/2 thru 3	—	V5011A & C interim & V5011F & G
4	14004562-001	1-1/2 thru 3	—	Adapter V5011A interim & V5011F
5	[1]	1/2 thru 3		Packing
6	[1]	1/2 thru 1-1/4	—	Spacer (2) Interim & V5011F
7	[1]	1/2 thru 3	—	Follower
8	[1]	1/2 thru 3	—	Spring
9	14004629-004	1-2 & 3/4	—	Bonnet
	14004630-004	1	—	
	14004596-004	1-1/4	—	
	14004597-004	1-1/2 & 2	—	
	14004598-004	2-1/2	—	
	14004599-004	3	—	
10	3116t20	1-1/2 thru 3	—	Stem Retainer Nut
11	311100	1-1/2 thru 3	—	Stem Retainer Spring (2) 3/4 in. Travel (1) 1-1/2 in. Travel
12	311093A	1/2	0.40–4.0	Stem & Disc Holder Assy
	311094A	3/4 thru 1	6.3, 10	
	311095A	1-1/4	16	
13	311619A	1-1/2 thru 3	10—100	Stem Assy, 3/4 in. travel
14	311633	1	10	Disc Holder
	311392	1-1/4	16	
	311433	1-1/2	25	
	311623	2	40	
	311745	2-1/2	63	
	311746	3	100	

[1]See REPACK KITS

Table 6. V5011A, C, F, and G Direct Acting Threaded Body Valve (Fig. 19)—Parts List. (Continued)

Key No.	Part No.	Valve Size in Inches	Cv	Description
15	14004625-011	1/2	0.40–40	Disc, V5011C&G
	14004625-001	1/2	0.63–4.0	Disc, V5011A&F
	14004625-012	3/4 thru 1	6.3–10	Disc, V5011C&G
	14004625-002	3/4 thru 1	6.3–10	Disc, V5011A&F
	14004625-013	1-1/4	16	Disc, V5011C&G
	14004625-003	1-1/4	16	Disc, V5011A&F
	14004625-014	1-1/2	25	Disc, V5011C&G
	14004625-004	1-1/2	25	Disc, V5011A&F
	14004625-015	2	40	Disc, V5011C&G
	14004625-005	2	40	Disc, V5011A & F
	14004625-016	2-1/2	63	Disc, V5011C&G
	14004625-006	2-1/2	63	Disc, V5011A&F
	14004625-017	3	100	Disc, V5011C&G
	14004625-007	3	100	Disc, V5011A&F
16	311099	1/2	0.40–4.0	Disc Spring
	310554	3/4 thru 1	6.3, 10	
	311098	1-1/4	16	
	311100	1-1/2	25	
	311327	2	40	
	311725	2-1/2	63	
	311727	3	100	
17	312349	1/2	0.63	Plug, V5011A & F
	14000519-001	1/2	1.0	
	14000518-001	1/2	1.6	
	14000520-001	1/2	2.5	
	14000508-001	1/2	4.0	
	311087	3/4	6.3	
	311088	1	10	
	311091	1-1/4	16	
	311089	1-1/2	25	
	311146	2	40	
	311860	2-1/2	63	
	311861	3	100	
	14000523-001	1/2	0.63	Plug V5011C & G
	14000522-001	1/2	1.0	
	14000521-001	1/2	1.6	
	14000524-001	1/2	2.5	
	14000525-001	1/2	4.0	
	314533	3/4	6.3	
	314534	1	10	
	314535	1-1/4	16	
	314536	1-1/2	25	
	314537	2	40	
	314538	2-1/2	63	
	314539	3	100	

Table 6. V5011A, C, F, and G Direct Acting Threaded Body Valve (Fig. 19)—Parts List. (Continued)

Key No.	Part No.	Valve Size in Inches	Cv	Description
17/18	311936E	1/2	0.40	Plug and Seat V5011C (Matched for metal-to-metal seating)
	311936A	1/2	0.63	
	311936B	1/2	1.0	
	311936C	1/2	1.6	
	311936D	1/2	2.5	
	311951A	1/2	4.0	
	311952A	3/4	6.3	
	311953A	1	10	
	311954A	1-1/4	16	
	312055A	1-1/2	25	
—	311728	3	100	Plug Nut
18	310535	1/2	0.40–2.5	Seat, All
	311055	1/2	4.0	All
	310536	3/4	2.5	Old 150
	310543	3/4	4.0	Old 150
	310890	3/4	6.3	All
	310538	1	4.0	Old 150
	310537	1	6.3	Old 150
	311077	1	10	All
	310540	1-1/4	6.3	Old 150
	311078	1-1/4	16	All
	310541	1-1/2	16	Old 150
	310542	1-1/2	25	All
	311291	2	25	Old 150
	311624	2	40	All
	311731	2-1/2	63	All
	311733	3	63	Old 150
	311734	3	100	All
19	—	1/2 thru 3	—	Valve Body
20	[1]	1-1/2 thru 3	—	Seal Packing
21	[1]	1-1/2 thru 3	—	Packing Adapter (Female)
22	[1]	1-1/2 thru 3	—	Packing (V-ring)
23	[1]	1-1/2 thru 3	—	Packing Adapter (Male)
24	[1]	1-1/2 thru 3	—	O-Ring Retainer
25	[1]	1-1/2 thru 3	—	O-Ring

[1]See REPACK KITS

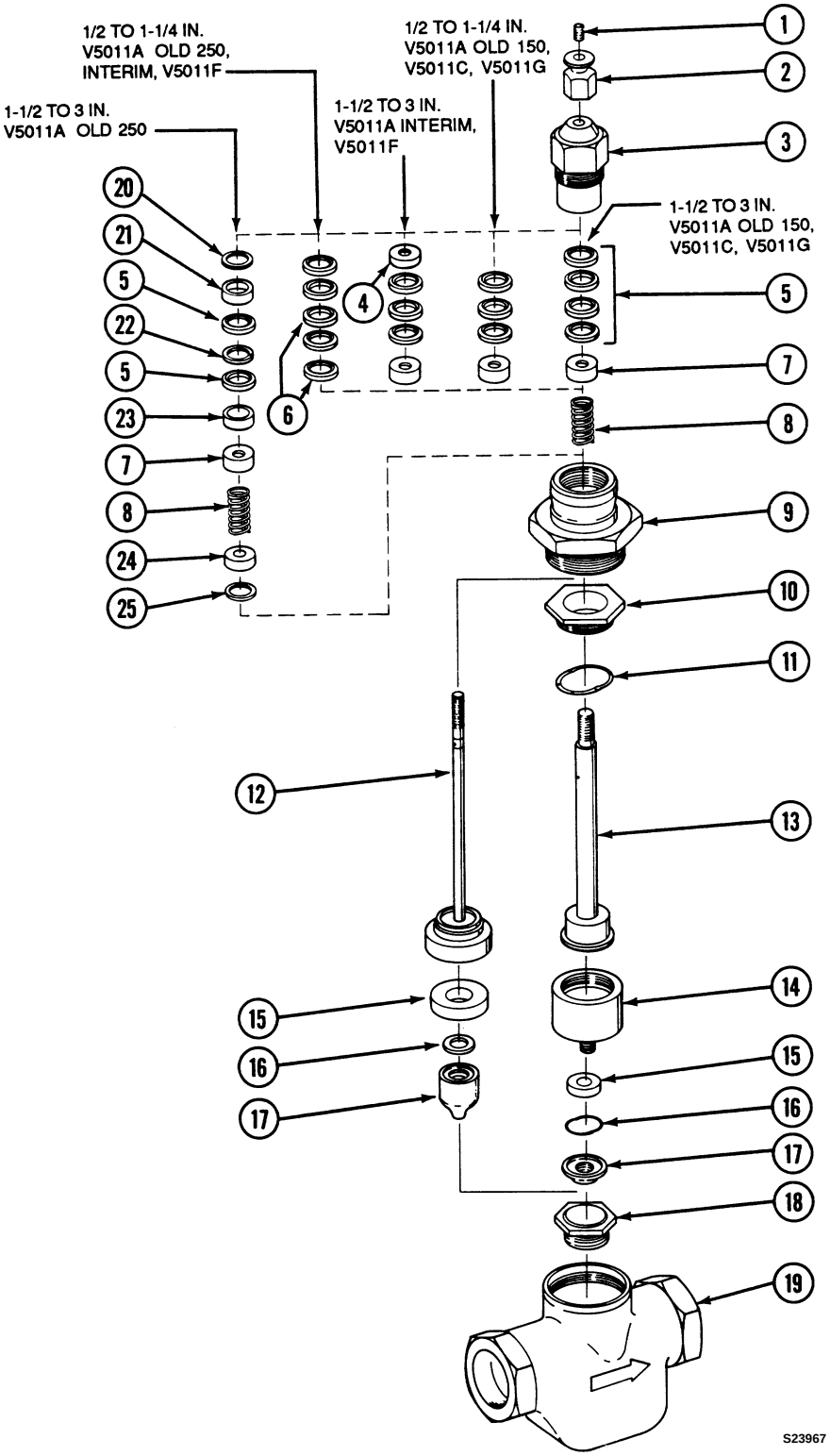

Fig. 19. V5011A, C, F, and G Direct Acting Threaded Body Valves—Exploded View.

Table 7. V5011A and D Flanged Body Direct Acting Valves (Fig. 20)—Parts List.

Key No.	Part No.	Valve Size in Inches	Description
1	—	—	Setscrew, Socket Hd (125 psi valves) 1/4-28 x 1/4 in.
2	312495	2-1/2, 3	Button—125 psi valves
	30041088-107	2-1/2, 3	Button—250 psi valves
	312496	4,5 & 6	Button—125 psi valves
	30041089-235	4, 5, & 6	Button—250 psi valves
3	—	—	Setscrew, 8-32 x 3/16 in.
4	30067857-107	2-1/2, 3	Nut, Packing Box—125 psi Valves
	30041038-001	4, 5, & 6	
	30683374-001	2-1/2, 3	Nut, Packing Box—250 psi Valves
	30683135-002	4, 5, & 6	
5	30682506-002	2-1/2, 3	Seal, Packing—250 psi Valves
	30682506-003	4, 5, & 6	
6	30685567-002	2-1/2, 3	Adapter, Female—250 psi Valves
	30685567-003	4, 5,, & 6	
7[1]	30041035-854	2-1/2, 3	Packing—125 psi Valves (4), Teflon
	30685565-002	2-1/2, 3	Packing—250 psi Valves (3), Rubber
	30681036-854	4, 5, & 6	Packing—125 psi Valves (5), Teflon
	30685565-003	4, 5, & 6	Packing—250 psi Valves (3), Rubber
8[1]	30685566-002	2-1/2, 3	Adaptor, Male—250 lb Valves
	30685566-003	4,5, & 6	
9[1]	30041086-107	2-1/2, 3	Spring Flange
	30041087-107	4, 5, & 6	Spring Flange (2)
10[1]	30041084-218	2-1/2, 3	Spring
	30041085-218	4, 5, & 6	
11	30685440-026	2-1/2, 3	O-Ring,—250 psi Valves
	30685440-025	4, 5, & 6	
12	—	2-1/2 thru 6	B onnet—must be replaced by item 15
13	—	2-1/2	Hex Cap Flange Bolt, 1/2-13 x 1-1/4 in. (4)
	—	3	1/2-13 x 1-1/4 in. (6)
	—	4	9/16-12 x 1-1/2 in. (6)
	—	5	9/16-12 x 1-1/2 in. (8)
	—	6	5/8-11 x 1-3/4 in. (8)
14	—	2-1/2 to 6	Adapter—must be replaced by item 15
15	30753371-001	2-1/2	Bonnet
	30753373-001	3	
	30753375-001	4	
	30753397-001	5	
	30753399-001	6	

[1]For all 2-1/2 and 3 in. valves and 4, 5, and 6 in. valves rated at 125 psi, see REPLACE KITS.

Table 7. V5011A and D Flanged Body Direct Acting Valves (Fig. 20)—Parts List. (Continued)

Key No.	Part No.	Valve Size in Inches	Description
16	30731050-001	2-1/2	Stem, 125 psi valves
	30731052-001	3	Stem, 125 psi valves
	30731054-001	4	Stem, 250 psi valves
	30683263-001	4	Stem, 125 psi valves
	30731056-001	5	Stem, 250 psi valves
	30683262-001	5	Stem, 125 psi valves
	30731058-001	6	Stem, 250 psi valves
	30683263-003	6	Stem, 125 psi valves
17	30674008-001	4, 5, & 6	Clip, 125 & 250 psi valve
	30064584-316	2-1/2 & 3	Clip, 250 psi valve
18	30064584-322	2-1/2 & 3	Pin, 125 lb valve
19	30041054-100	2-1/2	Disk Holder
	30041055-100	3	
	30041056-100	4	
	30041057-100	5	
	30041058-100	6	
20	30041049-835	2-1/2	Disc
	30041050-835	3	
	30041051-835	4	
	30041052-835	5	
	30041053-835	6	
21	30731049-001	2-1/2	Skirt
	30731051-001	3	
	30731053-001	4	
	30731055-001	5	
	30731057-001	6	
22	30048312-322	2-1/2 & 3	Nut
	30067756-322	4, 5, & 6	
23	30041027-760	2-1/2	Seat Ring
	30041028-760	3	
	30041029-760	4	
24	30046304-859	2-1/2	Gasket
	30046335-859	3	
	30046366-859	4	
	30046438-859	5	
	30046541-859	6	
25	—	2-1/2 to 6	Valve Body
26	30041026-200	4, 5, & 6	Cap — Not required on 2-1/2 and 3 in. valves

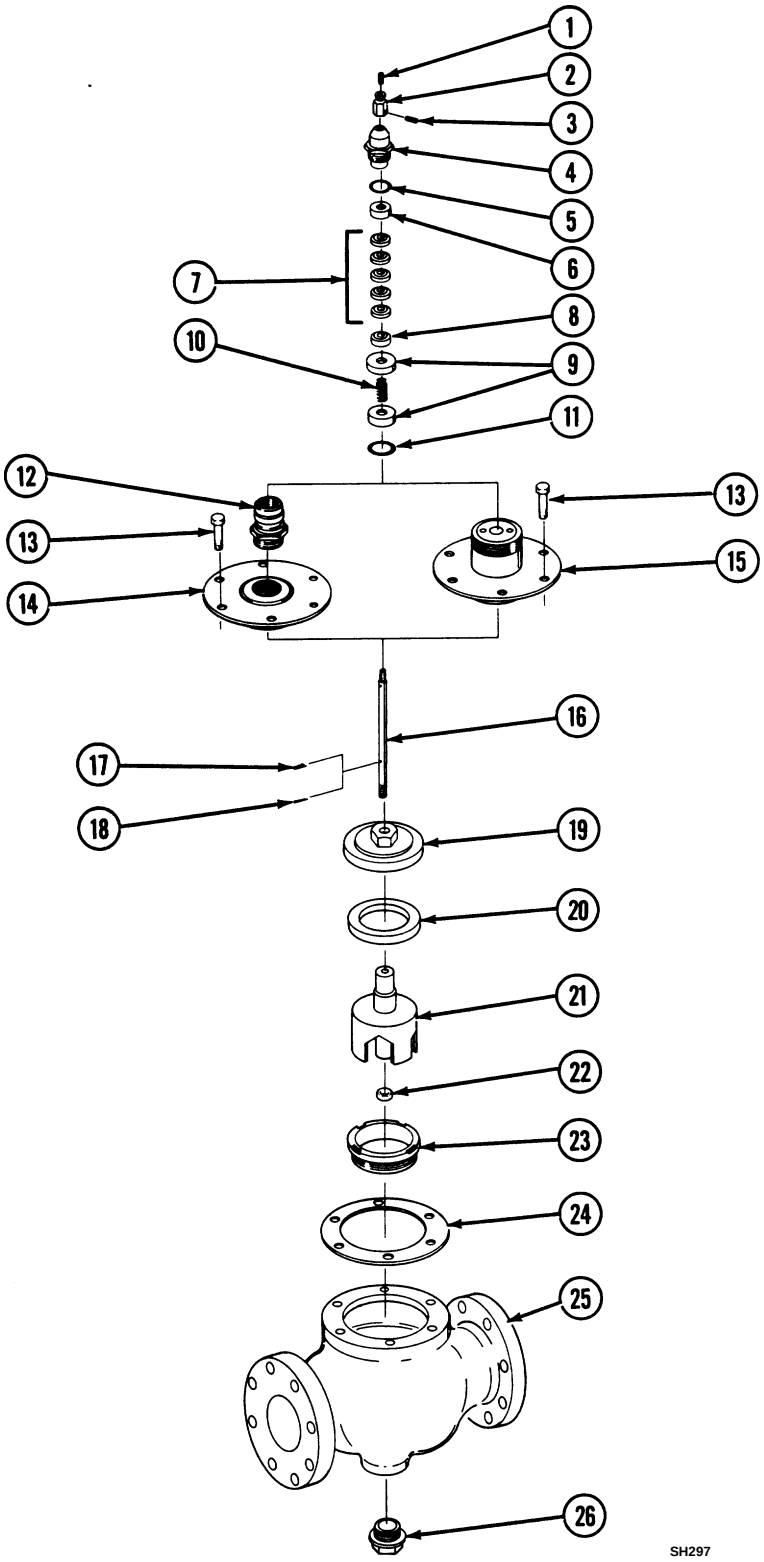

Fig. 20. V5011A and D Direct Acting Flanged Body Valves—Exploded View.

Table 8. V5011B and E Flanged Body Reverse Acting Valves (Fig. 21)—Parts List.

Key No.	Part No.	Valve Size in Inches	Description
1	—	—	Setscrew, Socket Hd (125 psi valves) 1/4-28 x 1/4 in. Setscrew, Cap Pt Socket (250 psi valves) 1/4-28 x 3/4 in.
2	312496 30041089-235	4, 5, & 6	Button—125 psi valves Button—205 psi valves
3	—	—	Setscrew, 8-32 x 3/16 in.
4	30041038-001 30683135-001	4, 5, & 6	Packing Box Nut—125 psi valves Packing Box Nut—250 psi valves
5	30682506-003	4, 5, & 6	Seal, Packing—250 psi valves
6	30685567-003	4, 5, & 6	Female Adapter—250 psi valves
7	30041036-854 30685565-003	4,5, & 6	Packing—125 psi valves (5) Packing—250 psi valves (3)
8	30685566-003	4, 5, & 6	Adapter, Male
9	30041087-107	4, 5, & 6	Spring Flange
10	30041085-218	4, 5, & 6	Spring
11	30685440-025	4, 5, & 6	O-ring—250 psi valves
12	30040646-760	4, 5, & 6	Bonnet
13	30041029-760	4	Seat Ring
14	30731054-001 30731056-001 30731058-001	4 5 6	Stem—125 and 250 psi valves
15	30674008-001	4, 5, & 6	Clip
16	30731053-001 30731055-001 30731057-001	4 5 6	Skirt
17	30041051-835 30041052-835 30041053-835	4 5 6	Disc
18	30041056-100 30041057-100 30041058-100	4 5 6	Disc Holder
19	30067756-322	4, 5, & 6	Nut
20	—	4, 5, & 6	Drop Pin (old style)
21	30046366-859 30046438-859 30046541-859	4 5 6	Gasket
22	30041023-100 30046436-100 30046542-001	4 5 6	Adapter
23	—	4, 5, & 6	Adapter Flange—must be replaced by item 22
24	—	4, 5, & 6	Body Plug—must be replaced by item 22
25	— — —	4 5 6	Hex Cap Flange Bolt, 9/16-12x1-1/2 in (6) (8) (8)
26	—	—	Valve Body

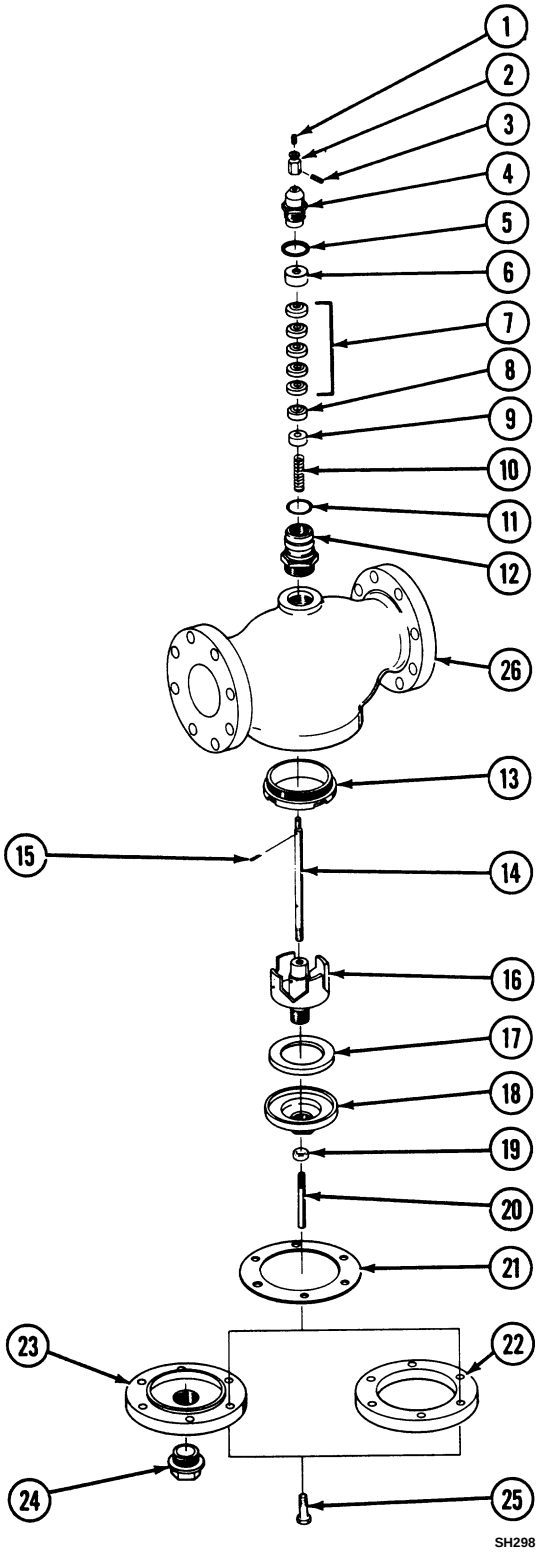

Fig. 21. V5011B and E Flanged Body Reverse Acting Valves—Exploded View.

Table 9. V5011H and J Threaded Body Reverse Acting Valve (Fig. 22)—Parts List.

Key No.	Part No.	Valve Size in Inches	Cv	Description
1	—	1/2 thru 1-1/4	—	Setscrew, Socket Hd 1/4-28 x 1/4
2	14004623-001	1/2 thru 1-1/4	—	Button
3	14004620-001	1/2 thru 1-1/4	—	Packing Nut V5011H
	310509	1/2 thru 1-1/4	—	Packing Nut V5011J
4	310143	1/2 thru1-1/4	—	Packing V (3) V5011H
	310623	1/2 thru1-1/4	—	Packing Cone (3) V5011J
5	310137	1/2 thru1-1/4	—	Spacer (2) V5011H
6	310506	1/2 thru 1-1/4	—	Follower V5011J
7	310135	1/2 thru 1-1/4	—	Spring V5011H
	310498	1/2-1-1/4	—	Spring V5011J
8	14004630-004	1/2 & 3/4	—	Bonnet
	14004600-002	1	—	
	14004596-004	1-1/4	—	
9	14004676-001	1/2	2.5	Plug, Equal Percentage V5011H
	14004677-001	1/2	4.0	
	14004678-001	3/4	6.3	
	14004680-001	1	10	
	14004680-001	1-1/4	16	
	14004681-001	1/2	2.5	Plug, Linear V5011J
	14004682-001	1/2	4.0	
	14004683-001	3/4	6.3	
	14004684-001	1	10	
	14004685-001	1-1/4	16	
10	311440	1/2 thru 1-1/4	—	Support, Upper
11	313338	1/2 thru 1-1/4	—	Stem
12	311441	1/2 thru 1-1/4	—	Support, Lower
13	313941	1/2 thru 1-1/4	—	Spring
14	14004625-008	1/2 & 3/4	—	Disc V5011H
	14004625-018	1/2 & 3/4		Disc V5011J
	14004625-009	1	—	Disc V5011H
	14004625-019	1		Disc V5011J
	14004625-010	1-1/4	—	Disc V5011H
	14004625-020	1-1/4		Disc V5011J
15	14004668-001	1/2 & 3/4	—	Discholder
	14004668-002	1	—	
	14004668-003	1-1/4	—	
16	313693	12 thru 1-1/4	—	O-Ring
17	311437	1/2 & 3/4	—	Plug
	14004670-001	1 and 1-1/4	—	Screw, Plug
18	—	1/2 thru 1-1/4	—	Body, Valve
19	—	1-2 thru 1/1/4	—	Cap, Outlet

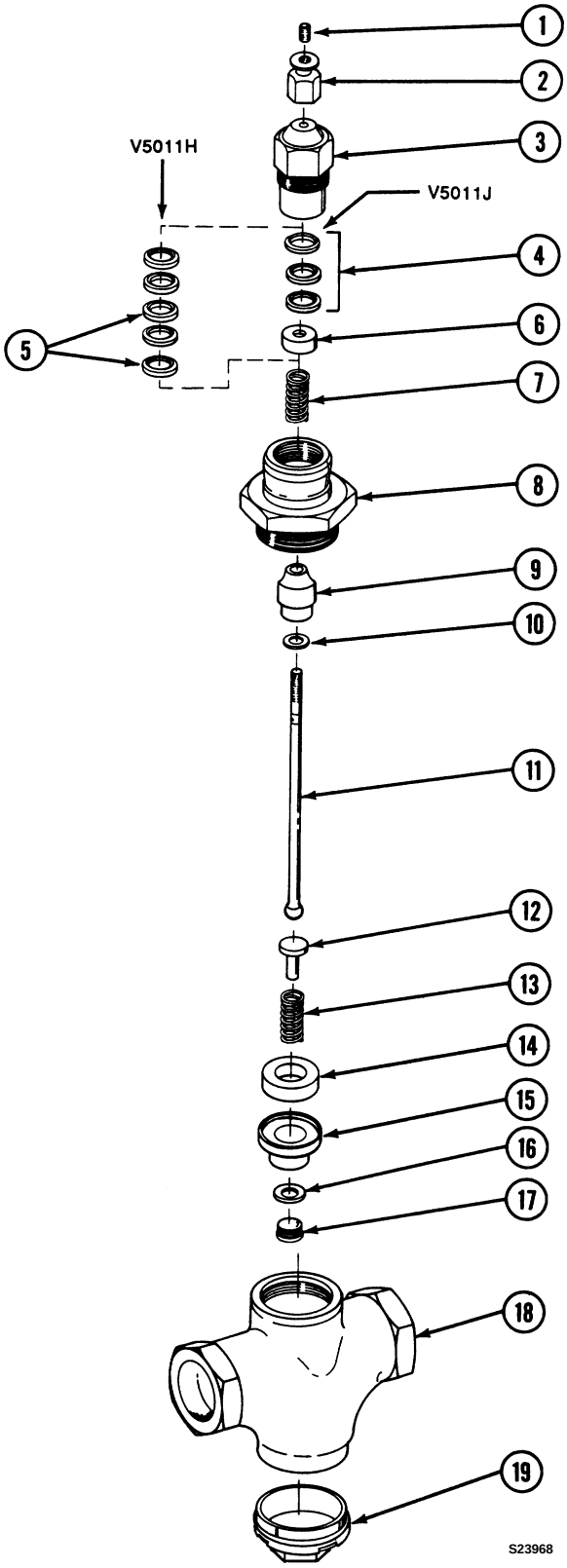

Fig. 22. V5011H and J Threaded Body Reverse Acting Valve—Exploded View.

Table 10. V5013A and F Threaded Body Three-Way Valve (Fig. 23)—Parts List.

Key No.	Part No.	Valve Size in Inches	Cv	Description
1	—	1/2 thru 2	—	Setscrew, Socket Hd 1/4-28 x 1/4
2	310503-00062	1/2 thru 2	—	Button
3	310509	1/2 thru 1/1-4	—	Packing Nut, Old 150 lb
	311431	1-1/2, 2	—	Old 150 lb.
	14004620-001	1/2 thru 1-1/4	—	Interim & V5011F
	14004552-001	1-1/2, 2	—	Interim & V5011F
4	14004562-001	1-1/2, 2	—	Female Adapter, Interim & V5011F
5	[1]	1/2 thru 2	—	Packing
6	[1]	1-1/2, 2	—	Packing V (1)
7	[1]	1/2 thru 1-1/4	—	Spacer (2) Interim & V5011F
8	[1]	1-1/2, 2	—	Male Adapter Interim & V5011F
9	[1]	1/2 thru 2	—	Follower
10	[1]	1/2 thru 2	—	Spring
11	14004630-004	1/2, 3/4	—	Bonnet
	14004600-002	1	—	
	14004596-004	1-1/4	—	
	14004601-002	1-1/2	—	
	14004602-002	2	—	
12	311444	1/2	2.5	Plug, Throttling
	311445	1/2	4.0	
	311446	3/4	6.3	
	311447	1	10.0	
	311448	1-1/4	16.0	
	311449	1-1/2	25.0	
	311450	2	40.0	
13	311440	1/2 thru 1-1/4	2.5-16	Stem Support
	311442	1-1/2, 2	25, 40	
14	313338	1/2 thru 1-1/4	2.5-16	Stem
	313339	1-1/2, 2	25, 40	
15	311441	1/2 thru 1-1/4	2.5-16	Spring Support
	311443	1-1/2, 2	25, 40	
16	313941	1/2 thru 2	2.5-16	Spring
17	311631	1/2 thru 1-1/4	2.5-16	0-ring
	313693	1-1/2, 2	25, 40	
18	311436	1/2 thru 1-1/4	2.5-16	Plug
	311437	1-1/2, 2	25, 40	
19	—	1/2 thru 2	—	Valve Body
20	—	1/2 thru 2	—	Lower Seat Outlet
21	[1]	1 thru 2	—	Seal Packing Old 250 lb
22	[1]	1 thru 2	—	Adapter Old 250 lb
23	[1]	1 thru 2	—	Adapter Old 250 lb
24	[1]	1 thru 2	—	O-ring, Reatiner Old 250 lb
25	[1]	1 thru 2	—	O-Ring Old 250 lb

[1]See REPACK KITS.

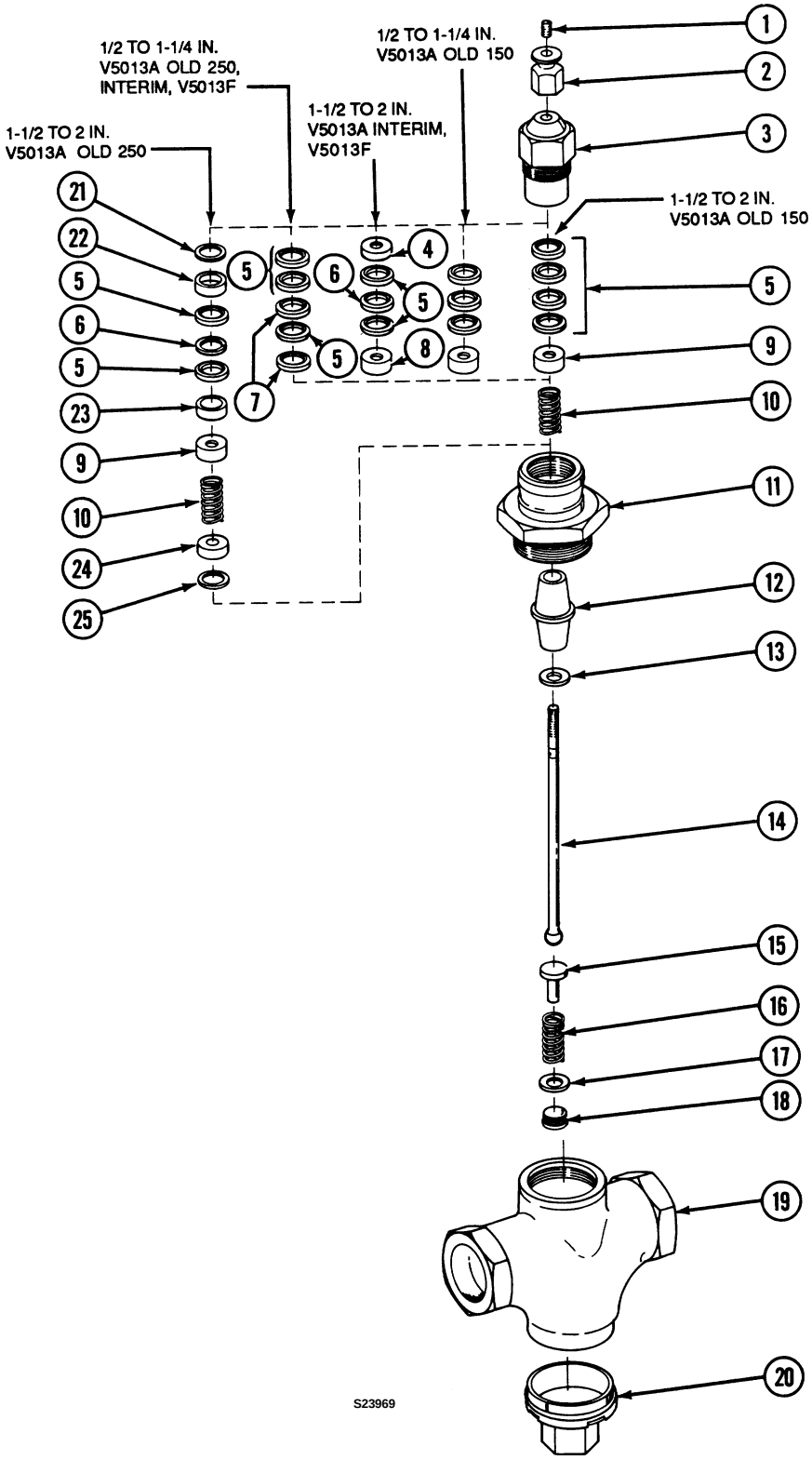

Fig. 23. V5013A and F Threaded Body Three-Way Valves—Exploded View.

Table 11. V5013A Flanged Body Three-Way Valve (Fig. 24)—Parts List.

Key No.	Part No.	Valve Size in Inches	Description
1	–	2-1/2 to 6	Setscrew, Socket Hd 1/4-28 x 1/4 in.
2	312495	2-1/2, 3	Button
	312496-00605	4 thru 6	
3	311431	2-1/2, 3	Packing Nut
	312497	4 thru 6	
4	311432	2-1/2, 3	Packing (4)
	312498	4 thru 6	Packing (5)
5	311430	2-1/2, 3	Follower
	312499	4 thru 6	
6	311565	2-1/2, 3	Spring
	312500	4 thru 6	
7	30040647-760	2-1/2, 3	Bonnet
	30040646-760	4 thru 6	
8	—	2-1/2 thru 6	Valve Body
9	30041067-316	2-1/2	Stem
	30041068-316	3	
	30041069-316	4	
	30046463-316	5	
	30046540-316	6	
10	30029911-322	2-1/2, 3	Pin
	30036549-322	4, 5	
	30032106-322	6	
11	30041027-760	2-1/2	Seat Ring (2)
	30041028-760	3	
	30041029-760	4	
	30041030-760	5	
	30041031-760	6	
12	30046324-760	3	Plug, Throttling
	30046363-760	4	
	30046437-760	5	
	30046522-760	6	
13	30046304-859	2-1/2	Gasket
	30046335-859	3	
	30046366-859	4	
	30046438-859	5	
	30046541-859	6	
14	30046337-900	3	Outlet - Lower Seat
	30046367-900	4	
	30046435-900	5	
	30046539-900	6	
15	—	2-1/2	Capscrew, Hex Hd 1/2-13 x 1-1/4 in. (4)
	—	3	1/2-13 x 1-1/4 in. (6)
	—	4	9/16-12 x 1/1-2 in. (6)
	—	5	9/16-12 x 1-1/2 in. (8)
	—	6	5/8-11 x 1-1/2 in. (8)

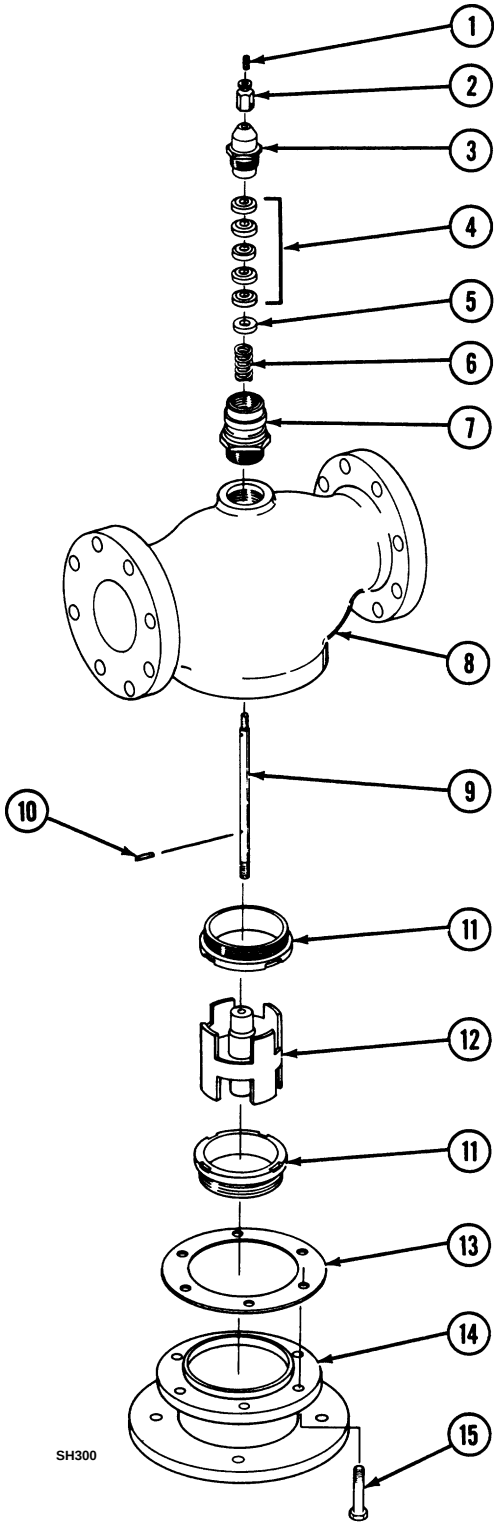

Fig. 24. V5013A Three-Way Flanged Body Valves—Exploded View.

Table 12. V5013B-E Three-Way Flanged Body Valve (Fig. 25)—Parts List.

Key No.	Part No.	Valve Size in Inches	Description
1	—	2-1/2 t3 (Div) 2-1/2 thru 6 (Mix) 4, 5, & 6 (Div)	Setscrew, Socket Hd. 1/4-28 x 1/4 in. 1/4-28 x 1/4 in. 1/4-28 x 3/4 in.
2	30041088-107 30041089-235	2-1/2, 3 4, 5, & 6	Button, Stem
3	—	—	Setscrew, Cut Point Socket Hd, 8-32 x 3/16 in.
4	30687857-107 30687858-001 30683374-001 30683135-002	2-1/2, 3 4, 5, & 6 2-1/2, 3 4, 5, & 6	Packing Box Nut (125 psi) Packing Box Nut S/A (250 psi)
5	30682506-002 30682506-003	2-1/2, 3 4, 5, & 6	Seal, Packing (250 psi)
6	30685567-002 30685567-003	2-1/2, 3 4, 5, & 6	Packing Adapter, Female (250 psi)
7	30041035-854 30041036-854 30685565-002 30685565-003	2-1/2, 3 4, 5, & 6 2-1/2, 3 4, 5, & 6	Packing, 125 psi (4) Packing, 125 psi (5) Packing, 250 psi (3) Packing, 250 psi (3)
8	30685566-002 30685566-003	2-1/2, 3 4, 5, & 6	Packing Ådapter, Male (250 psi)
9	30041086-107 30041087-107	2-1/2, 3 4, 5, & 6	Spring Flange (2 for 125 psi, 1 for 250 psi) Spring Flange (2)
10	30041084-218 30041085-218	2-1/2, 3 4, 5, & 6	Spring
11	30078905-000	2-1/2, 3	Washer (250 psi)
12	30685440-026 30685440-025	2-1/2, 3 4, 5, & 6	O-ring (250 psi)
13	— — — —	2-1/2 3 4 5 & 6	Capscrew, Hex Hd, 1/2-13 x 1-1/4 in. (4) Capscrew, Hex Hd, 1/2-13 x 1-1/4 in. (6) Capscrew, Hex Hd, 9/16-12 x 1-1/2 in. (6) Capscrew, Hex Hd, 9/16-12 x 1-1/2 in. (8)
14	30067827-200 30067828-200 30067829-200 30067830-200 30067831-200	2-1/2 3 4 5 6	Bonnet
15	30032534-272	8	Nut, Hex (2)
16	30037244-271	8	Stud (2)
17	30065377-392	8	Packing Flange
18	30065392-854	8	Upper Stem Wiper
19	30037243-303	8	Packing Follower
20	30065401-936	8	Spring Load Packing
21	30065410-316	8	Washer
22	30065380-461	8	Spring, Packing
23	30065410-316	8	Washer (8)
24	30065418-862	8	Lower Stem Wiper
25	30036963-392	8	Nut, Yoke Lock
26	—	8	Capscrew, Hex Hd, 3/4-10 x 2-1/4 (8)

Table 12. V5013B-E Flanged Body Three-Way Valve (Fig. 25)—Parts List. (Continued)

Key No.	Part No.	Valve Size in Inches	Description
27	30069128-200	8	Bonnet
28	30067837-316	2-1/2	Stem, Mixing
	30067838-316	3	
	30067839-316	4	
	30067840-316	5	
	30067841-316	6	
	30069132-316	8	
28	30067871-316	2-1/2	Stem, Diverting
	30067872-316	3	
	30067873-316	4	
	30067874-316	5	
	30067875-316	6	
	30069131-316	8	
29	30067842-905	2-1/2	Seat Ring Subassembly (2)
	30067843-905	3	
	30067844-905	4	
	30685316-001	5	Seat Ring (2)
	30067849-100	6	
	30069135-100	8	
30	30684011-001	2-1/2	O-Ring (2)
	30675311-891	3	
	30751331-506	4	
	30751331-508	5	
	30067856-891	6	
	30069137-891	8	
31	30067866-760	2-1/2	Plug, Divering (2)
	30067867-760	3	
	30067868-760	4	
	30067869-100	5	
	30067870-100	6	
	30069129-100	8	
32	30068786-107	2-1/2 & 3	Bushing, Divering
	30067877-707	4, 5, & 6	
	30069133-107	8	
33	30067832-760	2-1/2	Plug, Mixing
	30067833-760	3	
	30067834-760	4	
	30067835-760	5	
	30067836-760	6	
	30069130-100	8	
34	30048312-322	2-1/2 & 3	Nut, Skirt
	30067756-322	4, 5, & 6	
	30069136-322	8	
35	30067859-859	2-1/2	Gasket
	30067860-859	3	
	30067861-859	4	
	30067862-859	5	
	30067863-859	6	
	30069134-859	8	
36	—	2-1/2 to 8	Valve Body

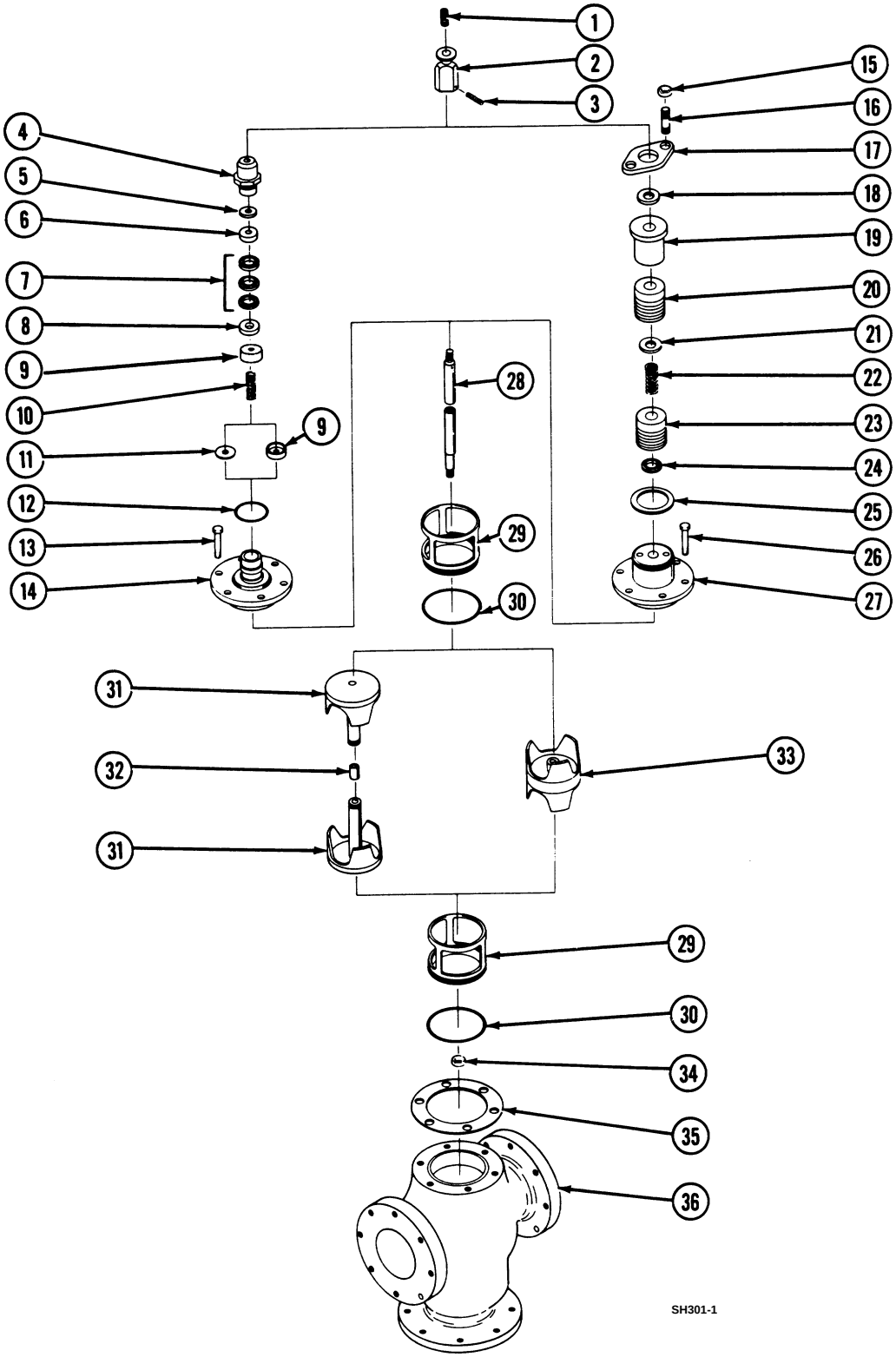

Fig. 25. V5013B-E Three-Way Flanged Body Valves—Exploded View.

REPACK KITS

Repack kits include Packing, Spacer, Follower, and Spring.

For V5011C, G, and J Valves use the following repack kits:

14003294-001—for l/2 through 1-1/4 in. valves.
14003295-001—for 1-1/2 through 3 in. valves.

For V5011A, H, and F and V5013A and F Valves use the following repack kits:

NOTE: V5011A Valves used in steam applications must be repacked with Teflon packing. See 14003294-001 and 14003295-001 Repack Kits.

14003294-003—for l/2 through 1-1/4 in. valves.
14003295-003—for 1-1/2 through 3 in. valves.
14003296-001—for 4, 5, and 6 in. valves.

REPAIR KITS

Repair kits include Packing, Follower, Spring, Stem Assembly, and Disc, 35 to 425F (0 to 218C).

For V5011C and G Valves use the following repair kits:

14002694-007—for 1/2 in. valves, Cv 0.63 through 4.0.
14002695-007—for 3/4 and 1 in. valves, Cv 6.3 and 10.0.
14003109-007—for 1-1/4 in. valves, Cv 16.
14003110-007—for 1-1/2 in. valves, Cv 25.
14003111-007—for 2 in. valves, Cv 40.

For V5011A and F Valves use the following repair kits:

14002694-005—for 1/2 in. valves, Cv 0.63 through 4.0. Includes new packing nut for 250 psi rating.
14002695-005—for 3/4 and 1 in. valves, Cv 6.3 and 10.0. Includes new packing nut for 250 psi rating.
14003109-005—for 1-1/4 in. valves, Cv 16. Includes new packing nut for 250 psi rating.
14003110-005—for 1-1/2 in. valves, Cv 25.
14003111-005—for 2 in. valves, Cv 40.

LUBRICANTS

Lubricants for valve stem and packing. See REPAIR.

300535—Amoco H-100
311057—Plastilube No. 2

V5011A, C, F, AND G VALVE SEAT DIMENSIONS

See Table 13 and Fig. 26 for V5011A, C, F, and G Valve Seat Dimensions.

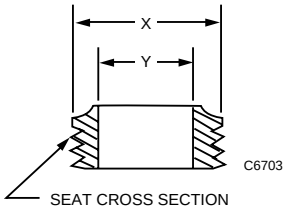

Fig. 26. V5011A, C, F, and G Valve Seat Dimensions.

ACCESSORIES

Stem Extensions (use with 8 or 13 in. actuators):

311851-00062, for 1/2 through 3 in. valves.
312466-00605, for 4, 5, and 6 in. valves.

Antispin Stem Button: 312495 Retrofit Kit to replace standard 310503-062 Stem Button.

250 psi Conversion Kits (upgrades packing rating from 150 to 250 psi) not for steam applications:

14003294-003, for 1/2 through 1-1/4 in. valves (rubber packing).
14003295-003, for 1-1/2 through 3 in. valves (Teflon packing).

NOTE: Other accessories may be listed on MP953 Service Data 75-5500.

Table 13. V5011A, C, F, and G Valve Seat Dimensions (Fig. 26).

Valve Size in Inches	Cv	Part No.	X Dimension in Inches	Y Dimension in Inches
1/2	0.48-2.5	310535	7/8 Hex	0.375
	4.0	311055	7/8 Hex	0.50
3/4	2.5	310536	1 Hex	0.375
	4.0	310543	1 Hex	0.50
	6.3	310890	1 Hex	0.70
1	4.0	310538	1-1/8 Hex	0.50
	6.3	310537	1-1/8 Hex	0.70
	10	311077	1-1/8 Hex	0.77
1-1/4	6.3	310540	1-3/8 Hex	0.70
	10	310539[1]	1-3/8 Hex	0.77
	16	311078	1-3/8 Hex	1.032
1-1/2	10	311289[1]	1-5/8 Hex	0.77
	16	310541	1-5/8 Hex	1.032
	25	310542	1-5/8 Hex	1.312
2	16	311290[1]	2-1/8 Hex	1.032
	25	311291	2-1/8 Hex	1.312
	40	311624	2-1/8 Hex	1.032
2-1/2	25	311729[1]	2-5/8 Hex	1.312
	40	311730[1]	2-5/8 Hex	1.703
	63	311731	2-5/8 Hex	2.20
3	40	311732[1]	3-1/8 Hex	1.703
	63	311733	3-1/8 Hex	2.20
	100	311734	3-1/8 Hex	2.812

[1]For obsolete valve models.

Honeywell

Home and Building Control
Honeywell Inc.
Honeywell Plaza
P.O. Box 524
Minneapolis, MN 55408-0524

Home and Building Control
Honeywell Limited-Honeywell Limitée
155 Gordon Baker Road
North York, Ontario
M2H 3N7

Helping You Control Your World®

QUALITY IS KEY

Printed in U.S.A. on recycled paper containing at least 10% post-consumer paper fibers.

77-5613—1 T.M. Rev. 9-97