T6862 Series Large LCD Digital Thermostat
Time Programmable
2-pipe/4-pipe fan coil control

Data sheet

Application

T6862 digital thermostats are designed for application of 3-speed fan and valves in fan coil system.
Including:

2-pipe cool only/heat only/manual changeover and 4-pipe manual or automatic changeover
- Ventilation mode
- Manual or automatic 3-speed fan control
- Water valve control

Fan speed can be selected to automatic or manual 3-speed control mode.
In ventilation mode, fan only support manual speed control.

Features

- Super modern appearance design, suitable for office, hotel and residential building
- Programmable based on 4 periods a day, 7 days a week.
- Horizontal and vertical model available for variant application
- Slim design, direct installation on 86 size box
- Stylish and elegant blue/green backlight with blue/green colour ring
- 2-pipe/4-pipe integrated into one unit with easy configuration
- Big LCD display with English and icons
- Easy to install and set-up
- Real time clock
- Selectable room temperature or setpoint display
- Manual or automatic fan speed selection
- Remote temperature sensor
- Energy saving mode activation by button press or dry contact (key card)
- Cycle per Hour (CPH) function
- Adjustment of display room temperature
- Temperature unit either °C or °F
- User setting can be kept when power off
- Freezing protection function available
- Lock or unlock keys or part of keys in Installer Set-up
- Heat and cool setpoint limitation for energy saving

Model summary

Model	Horizontal/ Vertical	Backlight	Color Ring	Time program	2-pipe/ 4-pipe	Power supply （V）	Energy Saving	Ventilation	Manual/ Automatic Fan	Remote Sensor
T6862H2WB	Horizontal	Blue	White	Y	2/4	220	Y	Y	Y	Y
T6862V2WB	Vertical	Blue	White	Y	2/4	220	Y	Y	Y	Y
T6862H2WG	Horizontal	Green	White	Y	2/4	220	Y	Y	Y	Y
T6862V2WG	Vertical	Green	White	Y	2/4	220	Y	Y	Y	Y
T6862H1WB	Horizontal	Blue	White	Y	2/4	110	Y	Y	Y	Y
T6862V1WB	Vertical	Blue	White	Y	2/4	110	Y	Y	Y	Y
T6862H1WG	Horizontal	Green	White	Y	2/4	110	Y	Y	Y	Y
T6862V1WG	Vertical	Green	White	Y	2/4	110	Y	Y	Y	Y

Note: Horizontal models are taken as samples for display, operation and installation pictures shown in below parts.

APH07CH04 – R2001EN

Mechanical design

Thermostat appearnce

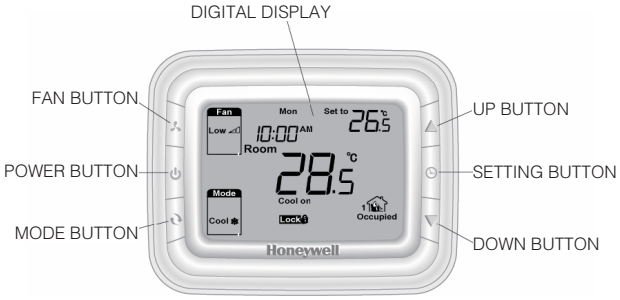

LCD display

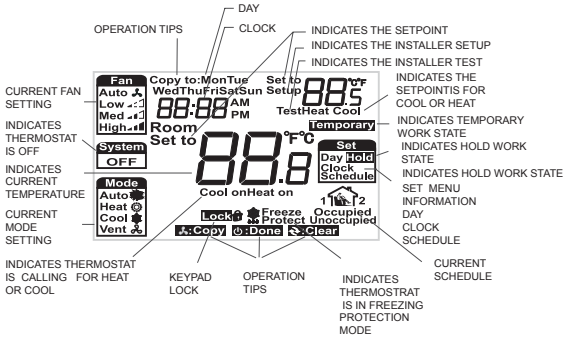

Function

Valve control

Thermostat acquires the room temperature via its integrated sensor or external temperature sensor and maintains the setpoint by delivering on/off valve control commands output.

PRESS THE MODE BUTTON TO SELECT HEAT, COOL, AUTO OR VENT

Fan Operation

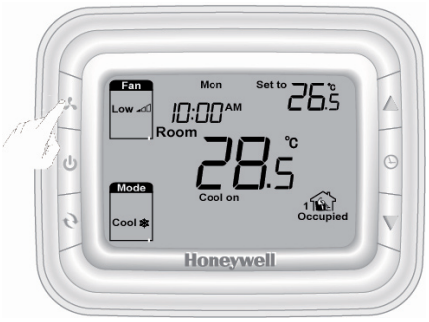

PRESS THE FAN BUTTON TO SELECT LOW, MED, HIGH OR AUTO

Fan can be selected as manual or automatic 3-speed operation. In Manual mode, the fan is switched to the selected speed via control output Gh, Gm, Gl. While in automatic mode, fan speed depends on the difference between room temperature and setpoint. When room temperature reaches setpoint, valve will be closed and meanwhile, fan will be closed either.

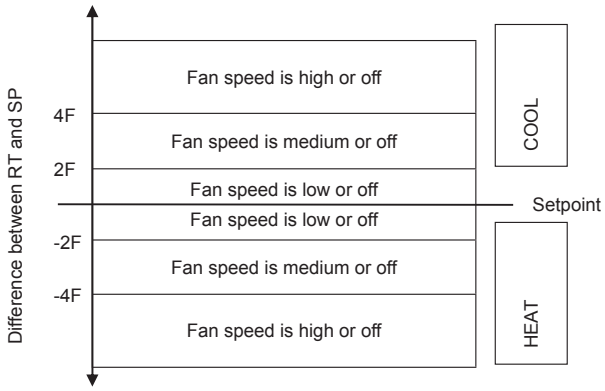

Fan speed ramping control algorithm

Four-pipe application

System will have a fixed deadband set in ISU between heating and cooling setpoints for Automatic Change Over (ACO) configured thermostats.While the heating and cooling set points determine the dead band.

If the difference between heating and cooling set points is less than the dead band set in ISU, then the dead band set in ISU is enforced. When adjusting the cooling set point, conflicts will be resolved by moving the heating set point out of the way of the cooling set point (heating set point=cooling set point –dead band set in ISU). When adjusting the heating setpoint, conflicts will be resolved by moving the cooling set point out of the way of the heating set point (cooling set point=heating set point +dead band set in ISU). Heating and Cooling range stops will determine the maximum heating setpoint setting and minimum cooling setpoint setting.

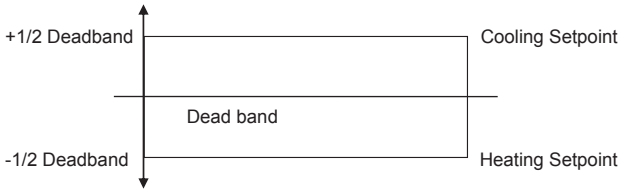

4 pipes auto change over setpoint algorithm

The last system control mode used will determine the mode in ACO when in the deadband.

Temperature display

The displayed temperature can be set to acquired room temperature or setpoint. The setting can be made during Installer Set-Up process.
Room temperature and scetornt can be displayed simultaneously.

Cycle per hour (CPH)

In order to get a more accurate temperature control, CPH function may enable the thermostat to open the valve for several times per hour even the temperature is close to setpoint (difference less than ½ P-band). The default value is 4 for heating and 3 for cooling and can be changed in Installer Set-Up process.

Time Programmable

Temperature setpoint can be adjusted in different value in each period within each day. Altogether 4 periods in one day and the temperature can be set respectively from Monday to Sunday. For default setting and detailed operation information, please refer to operation manual of T6862.

Backlight

Any key press will activate the backlight. Backlights will timeout 8 seconds after last key press. When in Installer Set-up and Installer test mode, the backlight will timeout 60 seconds after last key press.

Remote temperature sensor

T6861 provides control either depending on the acquired room temperature or depends on the return air temperature. The model of remote temperature sensor is (NTC20K).

Keypad lock

Keypad lock can be set in ISU with default status is all keys available. You may change into mode button locked out. Fan, Set and Mode buttons locked out and All buttons locked out by changing the ISU.

APH07CH04 – R2001EN

Operating modes

The following operating modes are available:

Comfort mode

In comfort mode, the setpoint can be changed by pressing up and down button. Different applications include cool only, heat only and manual heat/cool changeover.

TEMPERATURE SETTING
PRESS THIS BUTTON TO RAISE THE TEMPERATURE SETTING

PRESS THIS BUTTON TO LOWER THE TEMPERATURE SETTING

Ventilation mode

Press mode button to enter ventilation mode. In ventilation mode, no output for valve while the fan will operate according to selected fan speed.

Energy saving mode

A potential-free dry contact (such as hotel key card) or button press (pressing mode button for continuous 3 seconds) can activate the energy saving mode with Unoccupied icon appearing on screen. The dry contact can be selected as normal open or normal close type in ISU.

If activated by dry contact, all buttons will be locked except the multi-key for ISU. If energy saving is activated by button press, then any following button press will stop energy saving mode.

For heating mode, if the energy saving function is enabled, the setpoint will change to remote setback heating setpoint. The range of remote setback heating setpoint is from 10°C to 21°C and default value is 18°C. The value may change in ISU with step of 0.5°C.

For cooling mode, if the energy saving function is enabled, the setpoint will change to remote setback cooling setpoint. The range of remote setback cooling setpoint is from 22°C to 32°C and default value is 26°C. The value may change in ISU with step of 0.5°C.

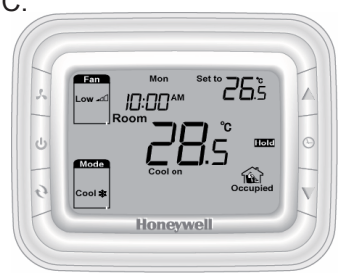

Freezing protection mode

Freezing protection can be selected as disabled (default) or enabled. In freezing protection mode (no such mode in cool only application), when thermostat is in OFF mode while the acquired temperature is below 6°C, the thermostat will start heat mode until the temperature rises to 8°C or the thermostat is turned on.

On/off mode

Pressing power button can switch between on and off mode.

INDICATES THERMOSTAT HAS BEEN SET TIME OFF

Technical specification

Power supply	110 (+/-10%) VAC, 220(+10%, -15%)VAC
Frequency	50/60Hz
Control algorithm	PI, On/off output
Accuracy	+/-1°C at 21°C
Rating capacity	For 220V power supply: 4(2)A for fan load, 2(1)A for zone valve For 110V power supply: 4(2)A for fan load, 2(1)A for zone valve
Cycle times	100,000 times
Setpoint range	10~32°C
Display range	0~37°C
Installation	Installed on 86×86mm junction box or US2×4 inch.
Protection Class	IP20
Environmental Conditions	Operation temperature -18~49°C Shipping temperature -35~65°C Relative humidity 5~90%

APH07CH04 – R2001EN

Terminal Designations

Item	Terminal	Description
1	Cc	Cooling close
2	Y	Cooling open
3	L	AC Power
4	Ch/Cc	Heating close/Cooling close
5	W/Y	Heating open/Cooling open
6	N	AC Ground
7	Gh	High speed fan relay
8	Gm	Medium speed fan relay
9	Gl	Low speed fan relay
10	Sc	Ground for remote sensor and remote setback
11	RSB	Remote set back
12	Rs	Remote sensor

Wiring diagrams

Application 1: 2 pipes heat only wiring diagram

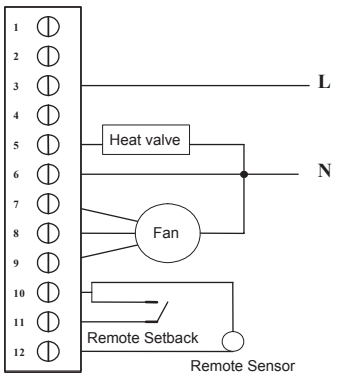

Typical wiring for ON/OFF control in 2 pipe heating only (VC4013)

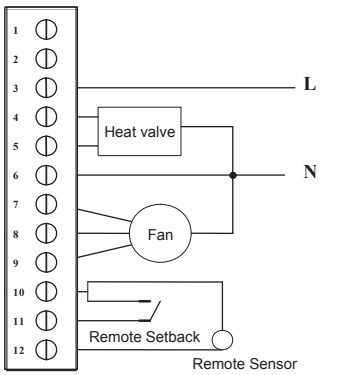

Typical wiring for ON/OFF control in 2 pipe heating only (VC6013)

Application 2: 2 pipes Cool only wiring diagram

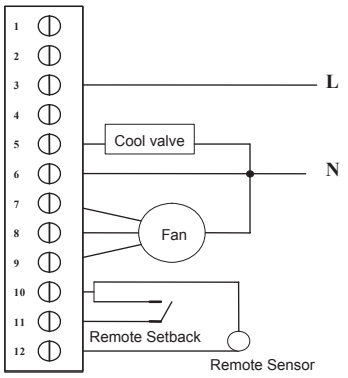

Typical wiring for ON/OFF control in 2 pipe cooling only (VC4013)

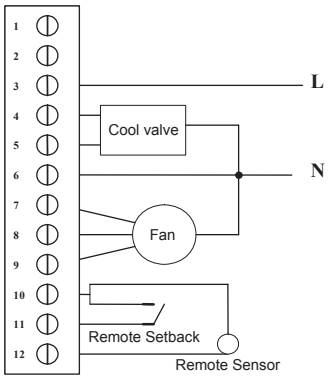

Typical wiring for ON/OFF control in 2 pipe cooling only (VC6013)

Application 3: 2 pipes 1 stage Heat or 1 stage Cool MCO wiring diagram

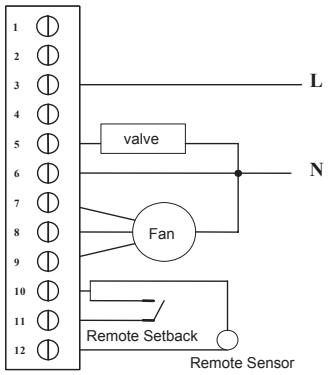

Typical wiring for ON/OFF control in 2 pipe 1H1C (VC4013)

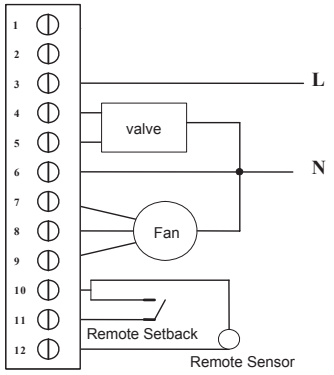

Typical wiring for ON/OFF control in 2 pipe 1H1C (VC6013)

APH07CH04 – R2001EN

Application 4: 4 pipes 1stage Heat and 1 stage Cool MCO/ACO wiring diagram

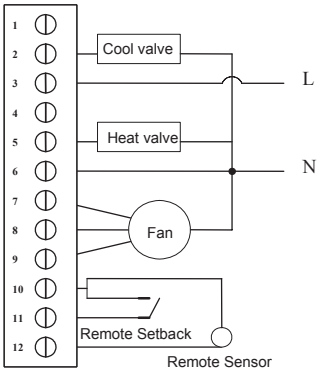

Typical wiring for ON/OFF Control in 4 pipe 1H/1C Auto/ Manual Change over (VC4013)

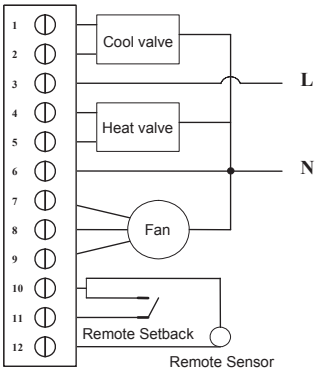

Typical wiring for 3-wire control in 4 pipe 1H/1C Auto/ Manual Change over (VC6013)

Installation & Commissioning

1 Pull wires through wire hole.
Loosen screw terminals, insert wires into terminal block, then retighten screws.

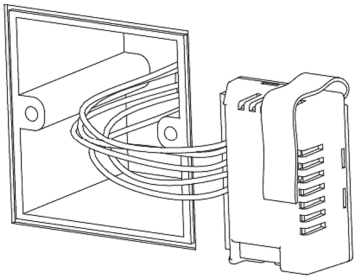

2 Push the Power box into the junction box.

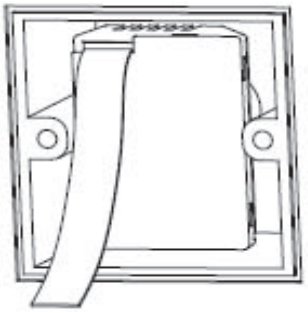

Back cover installation

Install the thermostat about 5 feet (1.5m) above the floor in an area with good air circulation at average temperature.

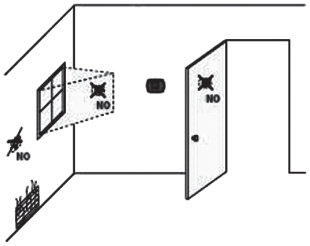

Do not install in locations where the thermostat can be affected by:

- Drafts or dead spots behind doors and in corners
- Hot or cold air from ducts
- Sunlight or radiant heat from appliances
- Concealed pipes or chimneys
- Unheated/uncooled areas such as an outside wall behind the thermostat

1 Place Back cover over junction box, insert and tighten mounting screws.

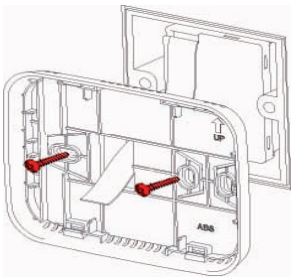

2 Insert the cable into connector on circuit board of thermostat.

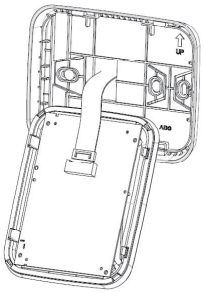

3 Align 4 tabs on the Back cover with corresponding slots on the back of the thermostat, and then push it until the thermostat snaps in place.

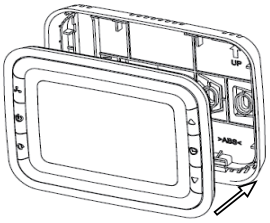

APH07CH04 – R2001EN

Installer system test

After completing the installer setup above, press the button again to begin a system test
Follow the procedure below to test the heating and cooling and fan system.

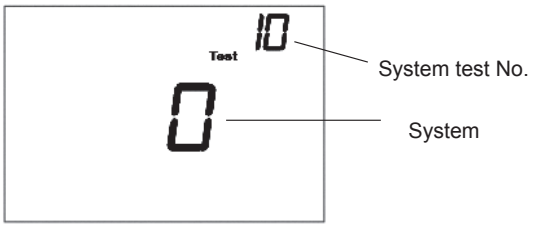

Press and hold ▲ and ▼ buttons 3 seconds to enter test mode.
Press ▲ or ▼ button to change system status.
Press ↻ button to advance to next test number.
Press ▲ and ▼ button simultaneously to terminate system test at any time.

System Test System Status
10 Heat 0 Heat turn off.
1 Heat turns on.
30 Cool 0 Cool off.
1 Cool on.
40 Fan 0 Fan off
1 Low speed Fan on
2 Medium speed Fan on
3 High speed Fan on
60 Display Run days
70 Thermostat information(for reference only)
71 Software revision number (major)
72 Software revision number (minor)
73 Configuration identification code (major)
74 Configuration identification code (minor)
75 Production configuration date code (week)
76 Production configuration date code (year)

Installer Set-Up (ISU) setting

Press ▲ and ↻ simultaneously for 3 seconds to enter ISU as below:

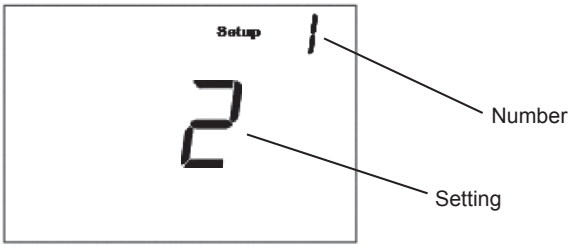

Press ▲ or ▼ to change settings
Press ✣ to advance to next function
Press ▲ and ↻ buttons simultaneously for 3 seconds to exit and save settings

Setup Function Settings & Options

ISU Code	Description	Possible Options
1	System type	0 Heat only
		1 Cool only
		2 Two pipes 1H1C manual(Default)
		4 Four pipes manual
		5 Four pipes (Default) auto
5	Remote sensor	**0 Onboard Sensor (Default)**
		1 Remote （NTC20K, T7770A1006, same as pipe sensor）
9	Temperature scale	0 ºF
		1 ºC(Default)
10	Fan control type	0 CYCLE ONLY (Default) Auto has fan ramping algorithm
		1 CONSTANT ONLY (3 speed: Low->Med->High-> Low)
		2 User can choose Cycle or Constant (Default) (3 speed: Low->Med->High->Auto->Low)
12	Sequence Dead band for four pipes	1 ºC (2 ºF)
		1.5 ºC (3 ºF)(Default)
		2 ºC (4 ºF)
		2.5 ºC (5 ºF)
		3 ºC (6 ºF)
		3.5 ºC (7 ºF)
		4 ºC (8 ºF)
		4.5 ºC (9 ºF)
13	CPH value for Heat	1
		2
		3
		4 (Default)
		5
		6
		7
		8
		9
		10
		11
		12
14	CPH value for Cool	1
		2
		3(Default)
		4
		5
		6
18	Display Temperature adjustment	-2 ºC(－4 ºF)
		-1.5 ºC(－3 ºF)
		-1 ºC(－2 ºF)
		-0.5 ºC(－1 ºF)
		0 ºC(0 ºF)(Default)
		0.5 ºC(1 ºF)
		1 ºC(2 ºF)
		1.5 ºC(3 ºF)
		2 ºC(4 ºF)
19	Temperature Display mode	0 Display Room Temperature
		1 Display Setpoint
		2 Display both (Default)
20	Heating Range Stops	10-32 ºC default 32 ºC (50-90 ºF default **90** ºF)
21	Cooling Range Stops	10-32 ºC default 10 ºC (50-90 ºF default **50** ºF)
22	Keypad Lockout	**0 All keys available(Default)**
		1 System button Locked out
		2 Fan ,Set and System button Locked out
		3 All buttons locked out
23	Remote setback enable method	0 Hotel card NO
		1 Hotel Card NC
		2 Disabled (Default)
24	Remote setback heating setpoint	Range 10-21ºC **Default : 18 ºC** (Range 50-70ºF **Default : 64 ºF**)
25	Remote setback cooling setpoint	Range 22-32ºC **Default : 26 ºC** (Range 72-90 ºF **Default : 79 ºF**)
27	Freeze Protection	**0 Disabled**
		1 Enabled
28	Time format	**0 12 hour (default)**
		1 24 hour
29	Run Days Record	**0 Disabled**
		1 Enabled

Troubleshooting Tips

If…	Then…
Heating system does not turn on.	♦ Set the mode to Heat by pressing the Mode button. ♦ Check that the heat temperature setting is set above the room temperature and “Heat On” shows solidly in the display. ♦ Wait five minutes for the heating system to respond.
Cooling system does not turn on.	♦ Set the mode to Cool by pressing the Mode button. ♦ Check that the cool temperature setting is set below the room temperature and “Cool On” shows solidly in the display. ♦ Wait five minutes for the cooling system to respond.
The fan doesn’t work.	♦ Check whether the Fan mode is set to Auto ♦ Check whether the heating or cooling system works.
The Mode button doesn’t work.	♦ Check whether the keypad is locked or not. ♦ Check whether the system is working in Energy saving mode. ♦ Check whether the thermostat is off.
The Fan button doesn’t work.	♦ Check whether the keypad is locked or not. ♦ Check whether the system is working in Energy saving mode. ♦ Check whether the thermostat is off.
The Up or Down button doesn’t work.	♦ Check whether the keypad is locked or not. ♦ Check whether the system is working in Energy saving mode. ♦ Check whether the thermostat is off.

Dimension

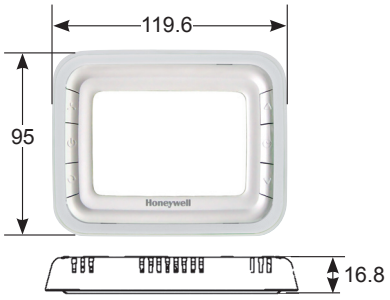

Horizontal model

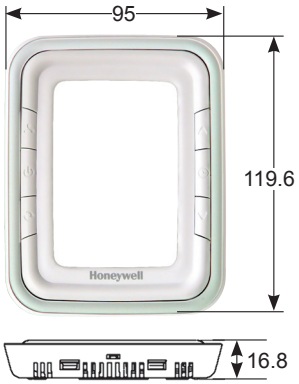

Vertical model