# Manual presetting valves LENO™ MSV-BD

## Description

LENO™ MSV-BD is a range of manual valves for balancing flow in heating, cooling and domestic hot water systems.

LENO™ MSV-BD is a combined presetting and shut off valve with a range of unique features:

- Removable hand wheel for easy mounting.
- 360° turnable measuring station for convenient measuring and draining.
- Numeric presetting scale, visible from more angles.
- Easy locking of presetting.
- Built-in test plugs for Ø 3 mm needles.
- Drain connection with separate draining of inlet and outlet side of valve.
- Open-close with Allen key for extra force.
- Open-closed colour indicator.

It is recommended to use LENO™ MSV-BD in constant flow systems. The valve may be mounted in flow or return.

DN 15 and 20 valves are available with internal or external thread. Other dimensions with internal thread.

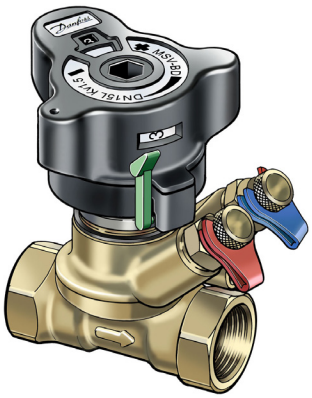

Danfoss PFM 5001/PFM 100 measuring instruments contain valve data for LENO™ MSV-BD in memory.

## Application

**Boiler, flat station or heat pump in 1-family houses**

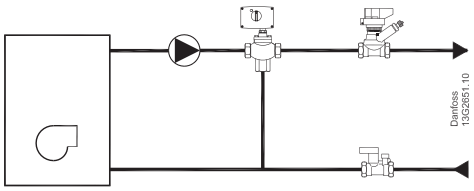


- For balancing.
- Shut-off function for service/repair.

**Air handling unit**

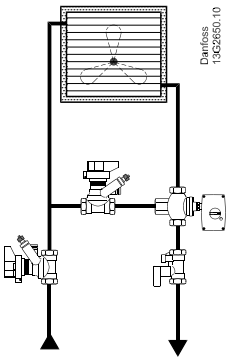


- For constant flow.
- For balancing.
- Shut-off function for service/repair.

## Application

**Fan coils**

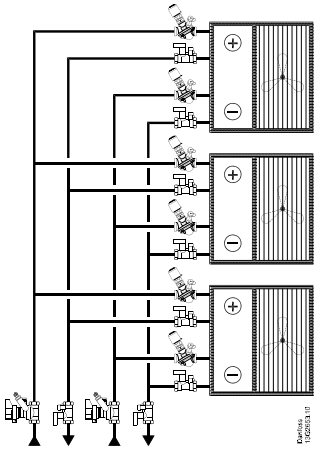

- For flow verification.
- Shut-off function for service/repair.

**1-pipe system**

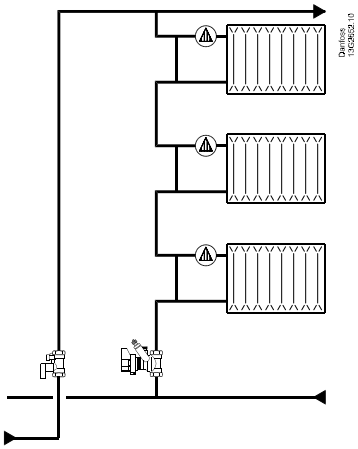

- For balancing.
- Shut-off function for service/repair.

## Ordering

**LENO™ MSV-BD valve with internal thread**

| Type | Material | Size | $k_{VS}$(m³/h) | Connection | Quantity | Code no. |
|---|---|---|---|---|---|---|
| | DZR brass [1] | DN 15 LF | 2.5 | ½" | 1 | **003Z4000** |
| | | DN 15 | 3.0 | ½" | 1 | **003Z4001** |
| | | DN 20 | 6.6 | ¾" | 1 | **003Z4002** |
| | | DN 25 | 9.5 | 1" | 1 | **003Z4003** |
| | | DN 32 | 18 | 1¼" | 1 | **003Z4004** |
| | | DN 40 | 26 | 1½" | 1 | **003Z4005** |
| | | DN 50 | 40 | 2" | 1 | **003Z4006** |
| | | DN 15 | 3.0 | ½" | 8 | **003Z4261** |
| | | DN 20 | 6.6 | ¾" | 8 | **003Z4262** |
| | | DN 25 | 9.5 | 1" | 8 | **003Z4263** |

**LENO™ MSV-BD valve with external thread**

| Type | Material | Size | $k_{VS}$(m³/h) | Connection | Code no. |
|---|---|---|---|---|---|
| | DZR brass [1] | DN 15 LF | 2.5 | G ¾ A [2] | **003Z4100** |
| | | DN 15 | 3.0 | G ¾ A [2] | **003Z4101** |
| | | DN 20 | 6.6 | G 1 A | **003Z4102** |

**LENO™ MSV-BD/S set solution**

| Type | Material | Size | $k_{VS}$(m³/h) | Drain flow [3] (l/h) | Connection | Code no. |
|---|---|---|---|---|---|---|
| | DZR brass [1] | DN 15 | 3.0 | 281 | ½" | **003Z4051** |
| | | DN 20 | 6.6 | 277 | ¾" | **003Z4052** |
| | | DN 25 | 9.5 | 316 | 1" | **003Z4053** |
| | | DN 32 | 18 | 305 | 1¼" | **003Z4054** |
| | | DN 40 | 26 | 208 | 1½" | **003Z4055** |
| | | DN 50 | 40 | 308 | 2" | **003Z4056** |

*[1] Corrosion resistant brass*
*[2] Eurocone DIN V 3838*
*[3] Drain flow is measured at 1 bar static pressure and 0.1 bar differential pressure.*

## Accessories

### Accessories

| Type | Code no. |
|---|---|
| Standard test plugs, 2 pcs. | **003Z4662** |
| Measuring test plugs, 53 mm, red and blue | **003Z3946** |
| Operating handle | **003Z4652** |
| Drain connection, ½" thread | **003Z4096** |
| Drain connection, ¾" thread | **003Z4097** |
| Flow measuring instrument PFM 5001 (10 bar) | **003L8343** |
| Flow measuring instrument PFM 5001 (20 bar) | **003L8344** |
| Identification tag & strips, 10 pcs. | **003Z4660** |
| MSV-BD insulation, DN 15 | **003Z4781** |
| MSV-BD insulation, DN 20 | **003Z4782** |
| MSV-BD insulation, DN 25 | **003Z4783** |
| MSV-BD insulation, DN 32 | **003Z4784** |
| MSV-BD insulation, DN 40 | **003Z4785** |
| MSV-BD insulation, DN 50 | **003Z4786** |

### Compression fittings for valves with external thread

| Pipe (mm) | Valve thread | PEX fittings, code no. | Alupex fittings, code no. |
|---|---|---|---|
| 12 x 1.1 | G ¾ | **013G4150** | |
| 12 x 2 | G ¾ | **013G4152** | **013G4182** |
| 13 x 2 | G ¾ | **013G4153** | |
| 14 x 2 | G ¾ | **013G4154** | **013G4184** |
| 15 x 1.7 | G ¾ | **013G4165** | |
| 15 x 2.5 | G ¾ | **013G4155** | **013G4185** |
| 16 x 1.5 | G ¾ | **013G4157** | |
| 16 x 2 | G ¾ | **013G4156** | **013G4186** |
| 16 x 2.25 | G ¾ | | **013G4187** |
| 17 x 2 | G ¾ | **013G4162** | |
| 18 x 2 | G ¾ | **013G4158** | **013G4188** |
| 18 x 2.5 | G ¾ | **013G4159** | |
| 20 x 2 | G ¾ | **013G4160** | **013G4190** |
| 20 x 2.5 | G ¾ | **013G4161** | **013G4191** |

### Compression fittings for valves with external thread

| Steel/copper pipes | Dimension | Code no. |
|---|---|---|
| | G ¾ x 15 | **013G4125** |
| | G ¾ x 16 | **013G4126** |
| | G ¾ x 18 | **013G4128** |
| | G 1 x 18 | **013U0134** |
| | G 1 x 22 | **013U0135** |

## Design

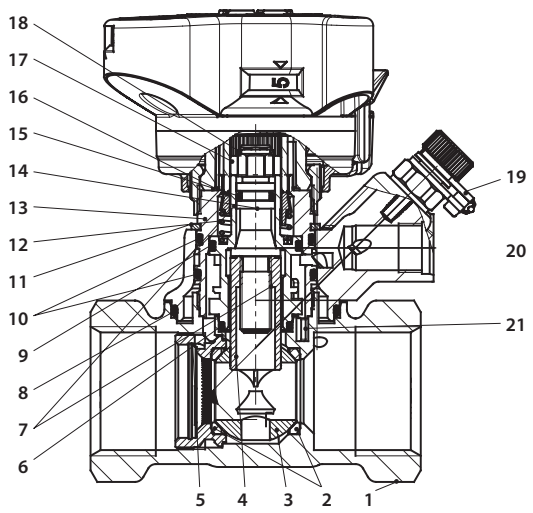


1. Valve body
2. Ball seat
3. Ball
4. Throttle bush
5. Support screw
6. O-ring
7. Shut-off bush
8. O-ring
9. O-ring
10. O-ring
11. Retaining ring (corrosion protected)
12. Spring
13. Valve top
14. Spindle
15. O-ring
16. Rotation lock
17. Spindle head
18. Retaining ring, corrosion protected
19. Strips, 2 pcs.
20. Hose connection
21. Stop plug

| Materials and parts in contact with water | |
|---|---|
| Valve body | DZR brass |
| O-rings | EPDM |
| Ball | Brass/chromium plated |
| Ball sealing | Teflon |

## Technical data

| | |
|---|---|
| Max. static working pressure | 20 bar |
| Static test pressure | 30 bar |
| Max. differential pressure across valve | 2.5 bar (250 kPa) |
| Max. flow temperature | 120 °C |
| Min. temperature | -20 °C |
| Cooling liquids | Ethylene glycol / propylene glycol and HYCOOL (max. 30 %) |

## Fitting

Before fitting the valve the installer must ensure that the pipe system is clean and:

1. the valve can be turned 360 degrees (if threaded pipe is used).
2. the valve is fitted according to the flow direction arrow.

**Removal of the handle**

1. Set the handle at 0.0.
2. Release the setting lock (green).
3. Unscrew the union nut.

**Calibration of the handle**

Before refitting, ensure that the handle setting is 0.0.

**For DN 15 - 20 valves with external thread**

Danfoss offers a complete range of compression fittings for steel, cobber and PEX pipes.

| DN | R1/R2 (mm) |
|---|---|
| 15 | 86/67 |
| 20 | 89/69 |
| 25 | 91/71 |
| 32 | 118/84 |
| 40 | 118/84 |
| 50 | 124/90 |

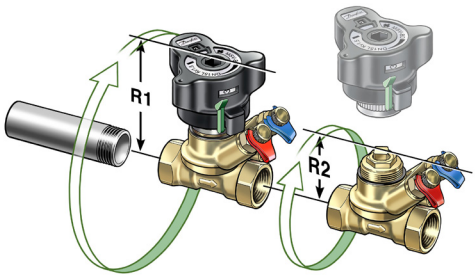

## Shut-off

In order to shut-off the valve the handle must be pressed down.

The shut-off function features a ball valve, which only requires a 90 degree turn to shut the valve completely.

An indicator window shows the actual setting:
- red = closed
- white = open

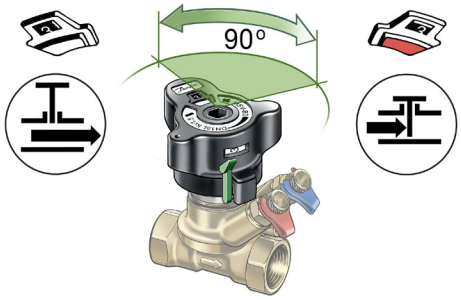


## Draining

***Note!***
***The drain connection is an accessory and must be purchased separately.***

The drain tap can rotate 360 degrees for convenient operation.

Draining the system pipes can be done selectively: When the red test plug is opened, the valve inlet pipe is drained.
Opening the blue test plug will drain the pipe on the valve outlet side.

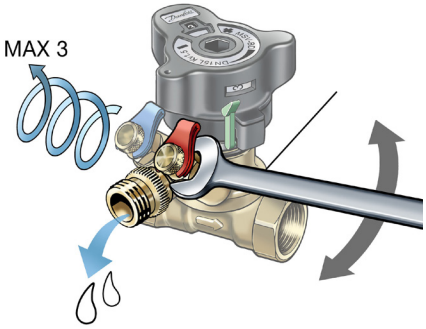


## Setting and sealing

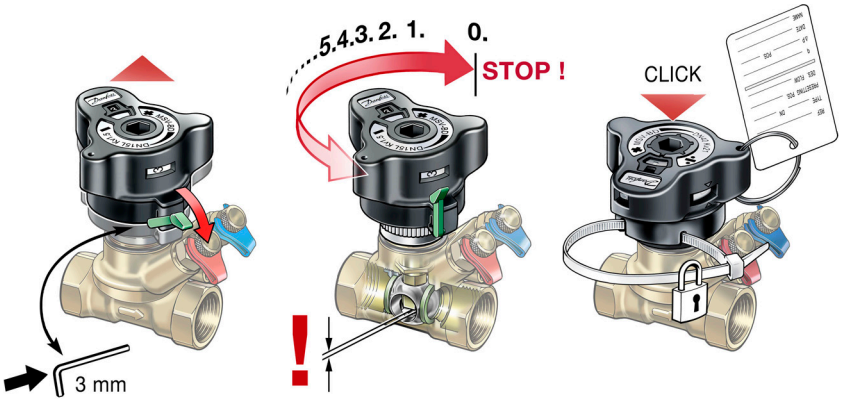


The valve has a presetting feature for setting/ adjusting flow ratings.

Setting the required flow is made in 5 steps:
1. In open position, release the lock using the green lever or a 3 mm Allen key.
2. The handle pops up automatically.
3. The calculated value can now be set.
4. The setting is locked when the handled is pressed to click.
5. The setting can be sealed by using a strip as shown.

## Measuring

The flow through the LENO™ MSV-BD valve can be measured using Danfoss PFM 5001 or other brands of measuring instruments.
The LENO™ MSV-BD valve is supplied with two test plugs for Ø3 mm needles.
A twin bracket enables the user to connect both needles simultanously.

Procedure for flow measuring:
1. Select flow measuring.
2. Select valve brand.
3. Select valve type and dimension.
4. Enter presetting.
5. Connect valve and instrument.
6. Calibrate static pressure.
7. Measure the flow.

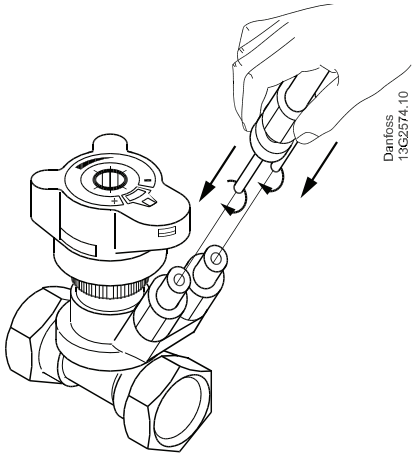


## Measuring accuracy

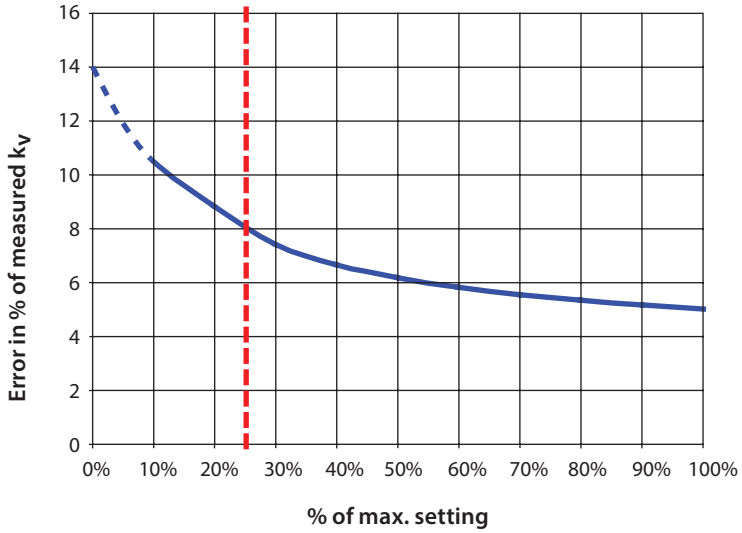


LENO™ MSV-BD is very accurate, due to the separate functions for presetting and shut-off.

The red line indicates 25% of max. flow.

According to BS7350:1990 flow rates must be within following values:
± 18% at 25% open position
± 10% at fully open position

## Kv-signal

kv-signal values are used for non-Danfoss measuring instruments. Danfoss PFM 5001 have all data in memory, and the instruments are using this formula:

$$\Delta P_{val} = \Delta P_{sig} \left( \frac{k_{v\text{-}sig}}{k_{v\text{-}val}} \right)^2$$

Δp across the test plugs ($k_{v\text{-}sig}$) and Δp across the valve ($k_{v\text{-}val}$) is not the same due to turbulence influence for pressure measuring.

## $K_V$-signal values

| Setting | DN 15LF | DN 15 | DN 20 | DN 25 | DN 32 | DN 40 | DN 50 |
|---|---|---|---|---|---|---|---|
| 0.0 | 0.07 | 0.10 | 0.12 | 0.34 | 0.51 | 1.05 | 1.75 |
| 0.1 | 0.08 | 0.11 | 0.16 | 0.44 | 0.73 | 1.20 | 2.01 |
| 0.2 | 0.09 | 0.12 | 0.20 | 0.53 | 0.92 | 1.36 | 2.25 |
| 0.3 | 0.11 | 0.13 | 0.26 | 0.61 | 1.10 | 1.55 | 2.47 |
| 0.4 | 0.12 | 0.14 | 0.32 | 0.67 | 1.26 | 1.74 | 2.69 |
| 0.5 | 0.13 | 0.16 | 0.38 | 0.73 | 1.43 | 1.95 | 2.91 |
| 0.6 | 0.15 | 0.19 | 0.45 | 0.79 | 1.60 | 2.17 | 3.12 |
| 0.7 | 0.16 | 0.21 | 0.53 | 0.84 | 1.78 | 2.40 | 3.35 |
| 0.8 | 0.17 | 0.24 | 0.60 | 0.90 | 1.97 | 2.64 | 3.58 |
| 0.9 | 0.19 | 0.26 | 0.67 | 0.95 | 2.18 | 2.88 | 3.82 |
| 1.0 | 0.20 | 0.29 | 0.74 | 1.01 | 2.39 | 3.13 | 4.07 |
| 1.1 | 0.21 | 0.32 | 0.82 | 1.08 | 2.62 | 3.39 | 4.33 |
| 1.2 | 0.23 | 0.34 | 0.89 | 1.14 | 2.87 | 3.64 | 4.60 |
| 1.3 | 0.25 | 0.37 | 0.96 | 1.22 | 3.12 | 3.90 | 4.89 |
| 1.4 | 0.27 | 0.40 | 1.03 | 1.29 | 3.38 | 4.16 | 5.18 |
| 1.5 | 0.30 | 0.44 | 1.09 | 1.37 | 3.64 | 4.43 | 5.49 |
| 1.6 | 0.32 | 0.47 | 1.16 | 1.46 | 3.92 | 4.69 | 5.80 |
| 1.7 | 0.35 | 0.51 | 1.23 | 1.55 | 4.19 | 4.96 | 6.13 |
| 1.8 | 0.37 | 0.54 | 1.30 | 1.65 | 4.48 | 5.24 | 6.46 |
| 1.9 | 0.40 | 0.58 | 1.38 | 1.75 | 4.76 | 5.51 | 6.80 |
| 2.0 | 0.43 | 0.61 | 1.45 | 1.85 | 5.05 | 5.80 | 7.14 |
| 2.1 | 0.46 | 0.65 | 1.53 | 1.96 | 5.35 | 6.08 | 7.49 |
| 2.2 | 0.49 | 0.69 | 1.61 | 2.07 | 5.65 | 6.38 | 7.84 |
| 2.3 | 0.52 | 0.73 | 1.69 | 2.18 | 5.96 | 6.68 | 8.19 |
| 2.4 | 0.56 | 0.77 | 1.78 | 2.29 | 6.27 | 6.99 | 8.55 |
| 2.5 | 0.59 | 0.80 | 1.87 | 2.41 | 6.60 | 7.30 | 8.91 |
| 2.6 | 0.62 | 0.85 | 1.97 | 2.53 | 6.94 | 7.63 | 9.27 |
| 2.7 | 0.66 | 0.89 | 2.07 | 2.65 | 7.29 | 7.98 | 9.64 |
| 2.8 | 0.69 | 0.93 | 2.17 | 2.77 | 7.67 | 8.33 | 10.00 |
| 2.9 | 0.73 | 0.97 | 2.29 | 2.89 | 8.06 | 8.70 | 10.37 |
| 3.0 | 0.76 | 1.01 | 2.40 | 3.01 | 8.48 | 9.08 | 10.74 |
| 3.1 | 0.80 | 1.04 | 2.52 | 3.13 | 8.92 | 9.48 | 11.11 |
| 3.2 | 0.83 | 1.08 | 2.65 | 3.25 | 9.38 | 9.90 | 11.49 |
| 3.3 | 0.87 | 1.12 | 2.78 | 3.37 | 9.87 | 10.33 | 11.88 |
| 3.4 | 0.90 | 1.16 | 2.91 | 3.49 | 10.38 | 10.79 | 12.27 |
| 3.5 | 0.94 | 1.20 | 3.05 | 3.62 | 10.91 | 11.26 | 12.67 |
| 3.6 | 0.97 | 1.25 | 3.19 | 3.74 | 11.46 | 11.74 | 13.09 |
| 3.7 | 1.01 | 1.30 | 3.33 | 3.87 | 12.02 | 12.25 | 13.51 |
| 3.8 | 1.06 | 1.35 | 3.47 | 4.00 | 12.58 | 12.77 | 13.95 |
| 3.9 | 1.10 | 1.41 | 3.61 | 4.13 | 13.12 | 13.30 | 14.41 |
| 4.0 | 1.14 | 1.47 | 3.75 | 4.26 | 13.64 | 13.85 | 14.88 |
| 4.1 | 1.18 | 1.53 | 3.89 | 4.39 | 14.12 | 14.41 | 15.38 |
| 4.2 | 1.23 | 1.59 | 4.02 | 4.53 | 14.52 | 14.98 | 15.89 |
| 4.3 | 1.27 | 1.66 | 4.15 | 4.68 | 14.84 | 15.55 | 16.44 |
| 4.4 | 1.31 | 1.73 | 4.28 | 4.82 | | 16.13 | 17.00 |
| 4.5 | 1.35 | 1.81 | 4.40 | 4.98 | | 16.69 | 17.59 |
| 4.6 | 1.39 | 1.91 | 4.52 | 5.13 | | 17.25 | 18.21 |
| 4.7 | 1.43 | 2.00 | 4.62 | 5.29 | | 17.80 | 18.86 |
| 4.8 | 1.47 | 2.08 | 4.72 | 5.46 | | 18.32 | 19.54 |
| 4.9 | 1.51 | 2.16 | 4.82 | 5.64 | | 18.80 | 20.24 |
| 5-0 | 1.54 | 2.23 | 4.90 | 5.81 | | 19.25 | 20.97 |
| 5.1 | 1.60 | 2.30 | 4.97 | 6.00 | | 19.65 | 21.73 |
| 5.2 | 1.66 | 2.36 | 5.04 | 6.19 | | 19.98 | 22.51 |
| 5.3 | 1.72 | 2.41 | 5.09 | 6.38 | | 20.24 | 23.30 |
| 5.4 | 1.79 | 2.46 | 5.14 | 6.57 | | 20.41 | 24.12 |
| 5.5 | 1.87 | 2.50 | 5.18 | 6.77 | | 20.48 | 24.94 |
| 5.6 | 1.93 | 2.54 | 5.21 | 6.96 | | | 25.76 |
| 5.7 | 1.99 | 2.57 | 5.24 | 7.15 | | | 26.58 |
| 5.8 | 2.04 | | 5.27 | 7.34 | | | 27.38 |
| 5.9 | 2.09 | | | 7.52 | | | 28.16 |
| 6.0 | 2.14 | | | 7.69 | | | 28.90 |
| 6.1 | 2.18 | | | 7.85 | | | 29.59 |
| 6.2 | 2.22 | | | 7.98 | | | 30.21 |
| 6.3 | 2.26 | | | | | | 30.74 |
| 6.4 | | | | | | | 31.17 |
| 6.5 | | | | | | | 31.47 |
| 6.6 | | | | | | | 31.61 |

## Valve size and presetting

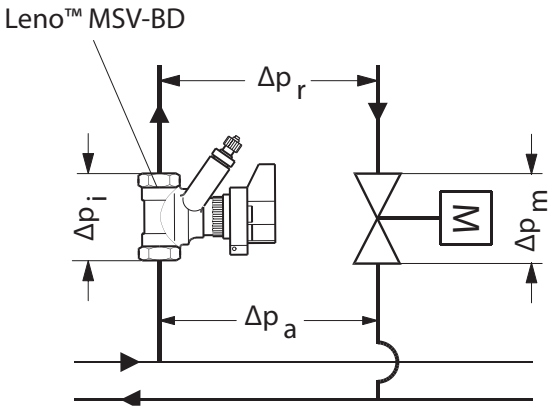


*$\Delta p_i$ Pressure drop across LENO™ MSV-BD valve*
*$\Delta p_m$ Pressure drop across valve*
*$\Delta p_r$ Necessary pressure for the riser*
*$\Delta p_a$ Available pressure for the riser*

**Example**

| | | | | | |
|---|---|---|---|---|---|
| **Given:** | Max. pipe flow Q | = | | | 2.0 m³/h |
| | $\Delta p_r$ | = | | | 15 kPa |
| | $\Delta p_a$ | = | | | 45 kPa |
| | $\Delta p_m$ | = | | | 10 kPa |
| | $\Delta p_i$ | = | | | $\Delta p_a - \Delta p_v - \Delta p_m$ |
| | $\Delta p_i$ | = | 45 kPa - 15 kPa - 10KPa | = | 20 kPa |

Correct valve size and presetting is found in the sizing and flow diagrammes, pp 9.

$Q = 2.0\ m^3/h$ and $\Delta p_i = 20$ kPa

Setting can be also calculated from the formula:

$$k_v = \frac{Q[m^3/h]}{\sqrt{\Delta p_i}[bar]} = \frac{2.0}{\sqrt{0.20}} = 4.5\ m^3/h$$

## Sizing

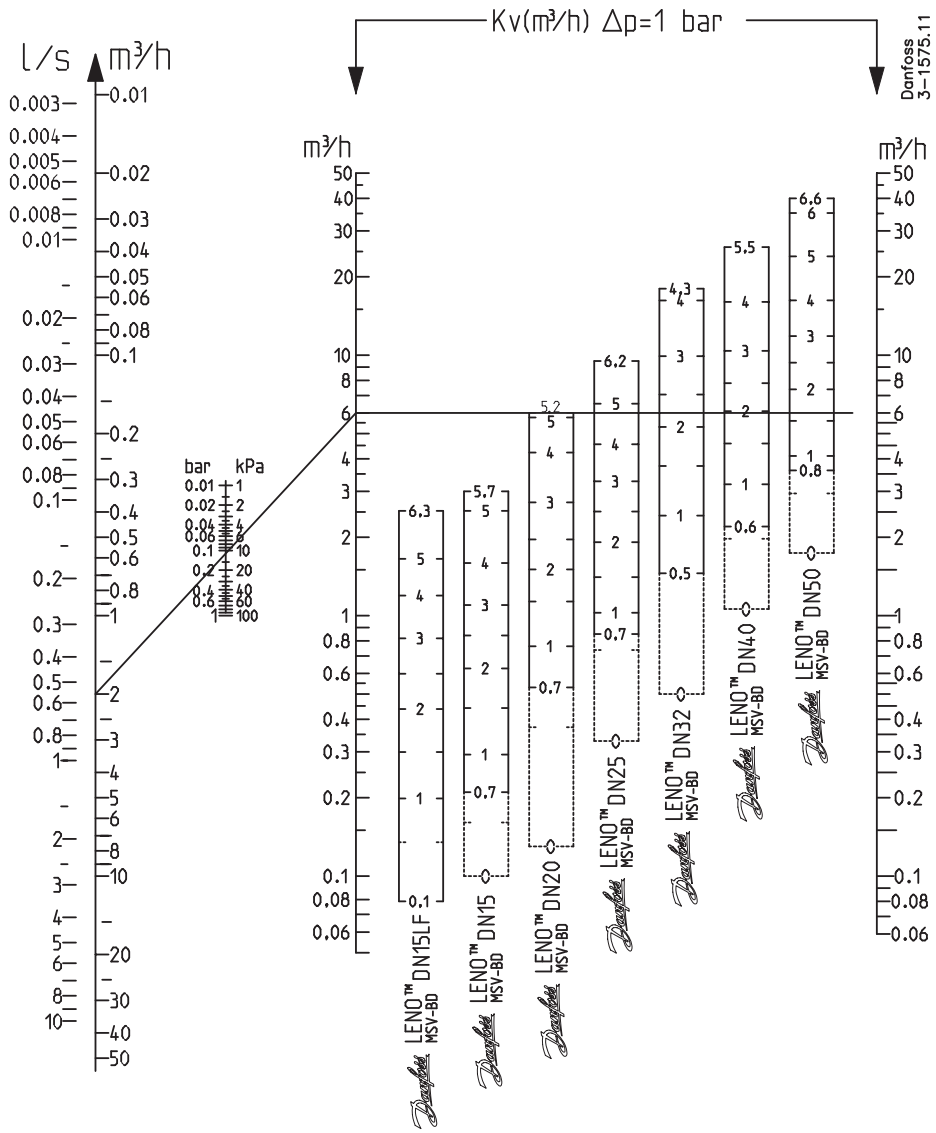


## Correction factors

Medium: Ethylene glycol / propylene glycol percentage (max. 30 %).

| Temp. °C | Flow, m³/h | | | | | | |
|---|---|---|---|---|---|---|---|
| | 25 | 30 | 40 | 50 | 60 | 65 | 100 |
| -40.0 | 1) | 1) | 1) | 1) | 0.89 | 0.88 | 1) |
| -17.8 | 1) | 1) | 0.93 | 0.91 | 0.90 | 0.89 | 0.86 |
| 4.4 | 0.95 | **0.95** | 0.93 | 0.92 | 0.91 | 0.90 | 0.87 |
| 26.6 | 0.96 | 0.95 | 0.94 | 0.93 | 0.92 | 0.91 | 0.88 |
| 48.9 | 0.97 | 0.96 | 0.95 | 0.94 | 0.93 | 0.92 | 0.90 |
| 71.1 | 0.98 | 0.98 | 0.96 | 0.95 | 0.94 | 0.94 | 0.95 |
| 93.3 | 1.00 | 0.99 | 0.97 | 0.96 | 0.95 | 0.95 | 0.92 |
| 115.6 | 2) | 2) | 2) | 2) | 2) | 2) | 0.94 |

*1) Below freezing point* *2) Above boiling point*

**Example**
Flow needed . . . . . .30 m³/h
Flow after correction . . . . . 30 x 0.95 = 28 m³/h

## Flow diagrammes, DN 15 LF

LENO™ MSV-BD DN 15 LF

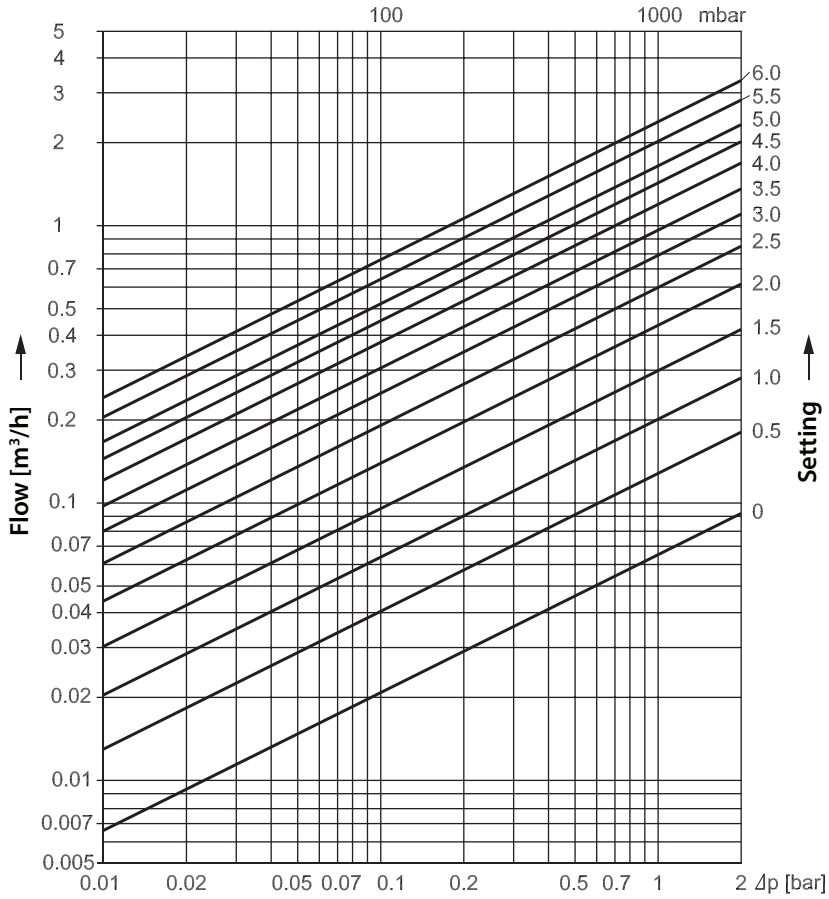


Flow characteristics

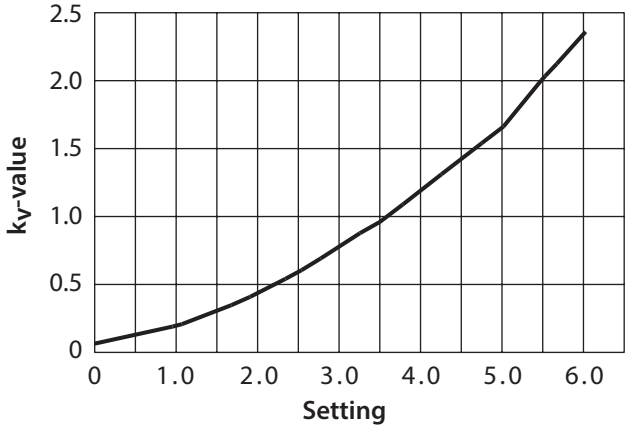


| Setting | $k_v$-value |
|---|---|
| 0.0 | 0.07 |
| 0.1 | 0.08 |
| 0.2 | 0.09 |
| 0.3 | 0.11 |
| 0.4 | 0.12 |
| 0.5 | 0.13 |
| 0.6 | 0.15 |
| 0.7 | 0.16 |
| 0.8 | 0.17 |
| 0.9 | 0.19 |
| 1.0 | 0.20 |
| 1.1 | 0.22 |
| 1.2 | 0.23 |
| 1.3 | 0.25 |
| 1.4 | 0.28 |
| 1.5 | 0.30 |
| 1.6 | 0.32 |
| 1.7 | 0.35 |
| 1.8 | 0.38 |
| 1.9 | 0.41 |
| 2.0 | 0.44 |
| 2.1 | 0.47 |
| 2.2 | 0.50 |
| 2.3 | 0.53 |
| 2.4 | 0.56 |
| 2.5 | 0.60 |
| 2.6 | 0.63 |
| 2.7 | 0.67 |
| 2.8 | 0.71 |
| 2.9 | 0.74 |
| 3.0 | 0.78 |
| 3.1 | 0.82 |
| 3.2 | 0.86 |
| 3.3 | 0.89 |
| 3.4 | 0.93 |
| 3.5 | 0.97 |
| 3.6 | 1.01 |
| 3.7 | 1.05 |
| 3.8 | 1.10 |
| 3.9 | 1.15 |
| 4.0 | 1.19 |
| 4.1 | 1.24 |
| 4.2 | 1.29 |
| 4.3 | 1.33 |
| 4.4 | 1.38 |
| 4.5 | 1.43 |
| 4.6 | 1.48 |
| 4.7 | 1.52 |
| 4.8 | 1.56 |
| 4.9 | 1.61 |
| 5.0 | 1.65 |
| 5.1 | 1.72 |
| 5.2 | 1.78 |
| 5.3 | 1.86 |
| 5.4 | 1.94 |
| 5.5 | 2.03 |
| 5.6 | 2.10 |
| 5.7 | 2.17 |
| 5.8 | 2.23 |
| 5.9 | 2.30 |
| 6.0 | 2.36 |
| 6.1 | 2.42 |
| 6.2 | 2.47 |
| 6.3 | 2.53 |

## Flow diagrammes, DN 15

LENO™ MSV-BD DN 15

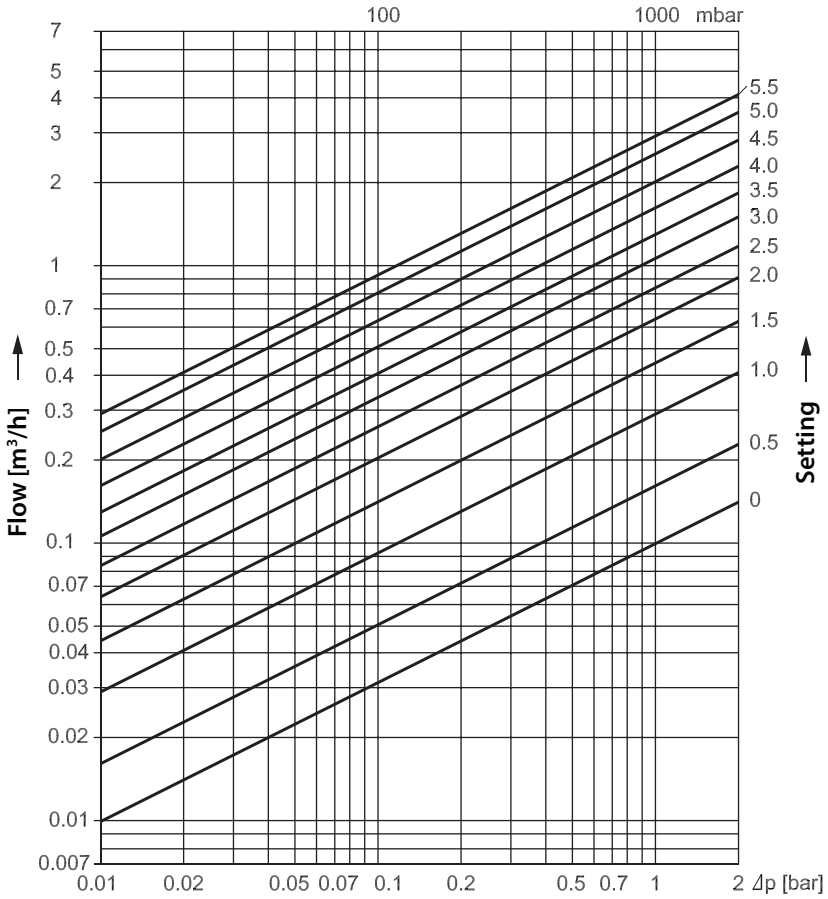


| Setting | $k_v$-value |
|---|---|
| 0.0 | 0.10 |
| 0.1 | 0.11 |
| 0.2 | 0.12 |
| 0.3 | 0.13 |
| 0.4 | 0.14 |
| 0.5 | 0.16 |
| 0.6 | 0.19 |
| 0.7 | 0.21 |
| 0.8 | 0.24 |
| 0.9 | 0.27 |
| 1.0 | 0.29 |
| 1.1 | 0.32 |
| 1.2 | 0.35 |
| 1.3 | 0.38 |
| 1.4 | 0.41 |
| 1.5 | 0.44 |
| 1.6 | 0.48 |
| 1.7 | 0.51 |
| 1.8 | 0.55 |
| 1.9 | 0.59 |
| 2.0 | 0.63 |
| 2.1 | 0.67 |
| 2.2 | 0.71 |
| 2.3 | 0.75 |
| 2.4 | 0.80 |
| 2.5 | 0.84 |
| 2.6 | 0.88 |
| 2.7 | 0.93 |
| 2.8 | 0.97 |
| 2.9 | 1.02 |
| 3.0 | 1.06 |
| 3.1 | 1.10 |
| 3.2 | 1.14 |
| 3.3 | 1.19 |
| 3.4 | 1.23 |
| 3.5 | 1.28 |
| 3.6 | 1.34 |
| 3.7 | 1.40 |
| 3.8 | 1.46 |
| 3.9 | 1.52 |
| 4.0 | 1.59 |
| 4.1 | 1.66 |
| 4.2 | 1.74 |
| 4.3 | 1.82 |
| 4.4 | 1.91 |
| 4.5 | 2.00 |
| 4.6 | 2.12 |
| 4.7 | 2.23 |
| 4.8 | 2.33 |
| 4.9 | 2.43 |
| 5.0 | 2.53 |
| 5.1 | 2.61 |
| 5.2 | 2.70 |
| 5.3 | 2.77 |
| 5.4 | 2.84 |
| 5.5 | 2.90 |
| 5.6 | 2.95 |
| 5.7 | 3.00 |

Flow characteristics

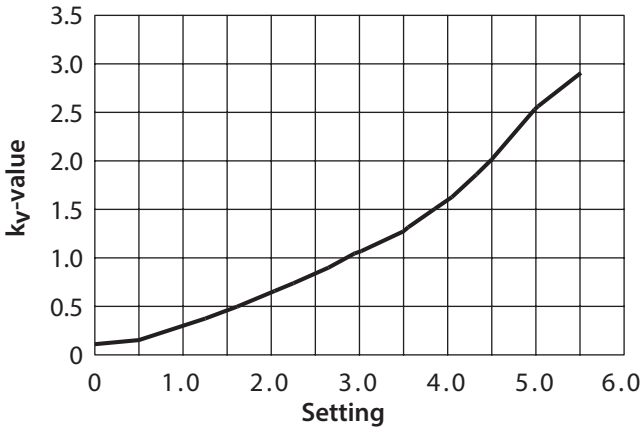

## Flow diagrammes, DN 20

LENO™ MSV-BD DN 20

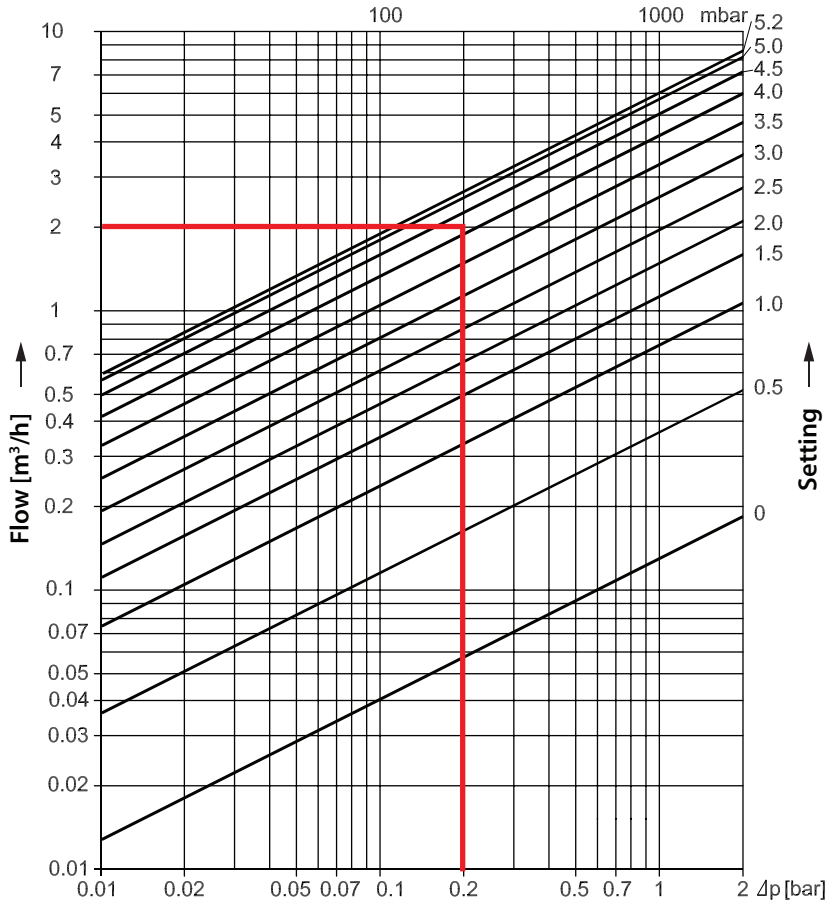


Flow characteristics

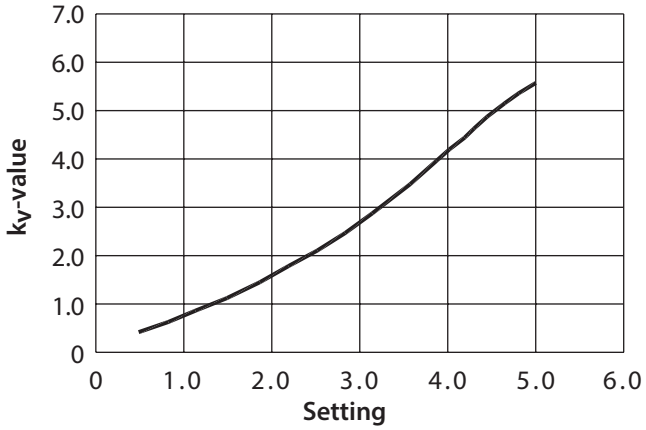


| Setting | $k_v$-value |
|---|---|
| 0.0 | 0.13 |
| 0.1 | 0.15 |
| 0.2 | 0.19 |
| 0.3 | 0.24 |
| 0.4 | 0.30 |
| 0.5 | 0.37 |
| 0.6 | 0.45 |
| 0.7 | 0.53 |
| 0.8 | 0.61 |
| 0.9 | 0.68 |
| 1.0 | 0.76 |
| 1.1 | 0.84 |
| 1.2 | 0.92 |
| 1.3 | 0.99 |
| 1.4 | 1.06 |
| 1.5 | 1.13 |
| 1.6 | 1.21 |
| 1.7 | 1.28 |
| 1.8 | 1.35 |
| 1.9 | 1.43 |
| 2.0 | 1.50 |
| 2.1 | 1.59 |
| 2.2 | 1.67 |
| 2.3 | 1.76 |
| 2.4 | 1.86 |
| 2.5 | 1.96 |
| 2.6 | 2.07 |
| 2.7 | 2.19 |
| 2.8 | 2.31 |
| 2.9 | 2.44 |
| 3.0 | 2.58 |
| 3.1 | 2.72 |
| 3.2 | 2.87 |
| 3.3 | 3.03 |
| 3.4 | 3.19 |
| 3.5 | 3.36 |
| 3.6 | 3.53 |
| 3.7 | 3.70 |
| 3.8 | 3.87 |
| 3.9 | 4.05 |
| 4.0 | 4.23 |
| 4.1 | 4.40 |
| 4.2 | 4.58 |
| 4.3 | 4.75 |
| 4.4 | 4.91 |
| 4.5 | 5.07 |
| 4.6 | 5.22 |
| 4.7 | 5.37 |
| 4.8 | 5.51 |
| 4.9 | 5.64 |
| 5.0 | 5.77 |
| 5.1 | 5.88 |
| 5.2 | 6.00 |
| 5.3 | 6.09 |
| 5.4 | 6.19 |
| 5.5 | 6.29 |
| 5.6 | 6.39 |
| 5.7 | 6.49 |
| 5.8 | 6.60 |

## Flow diagrammes, DN 25

LENO™ MSV-BD DN 25

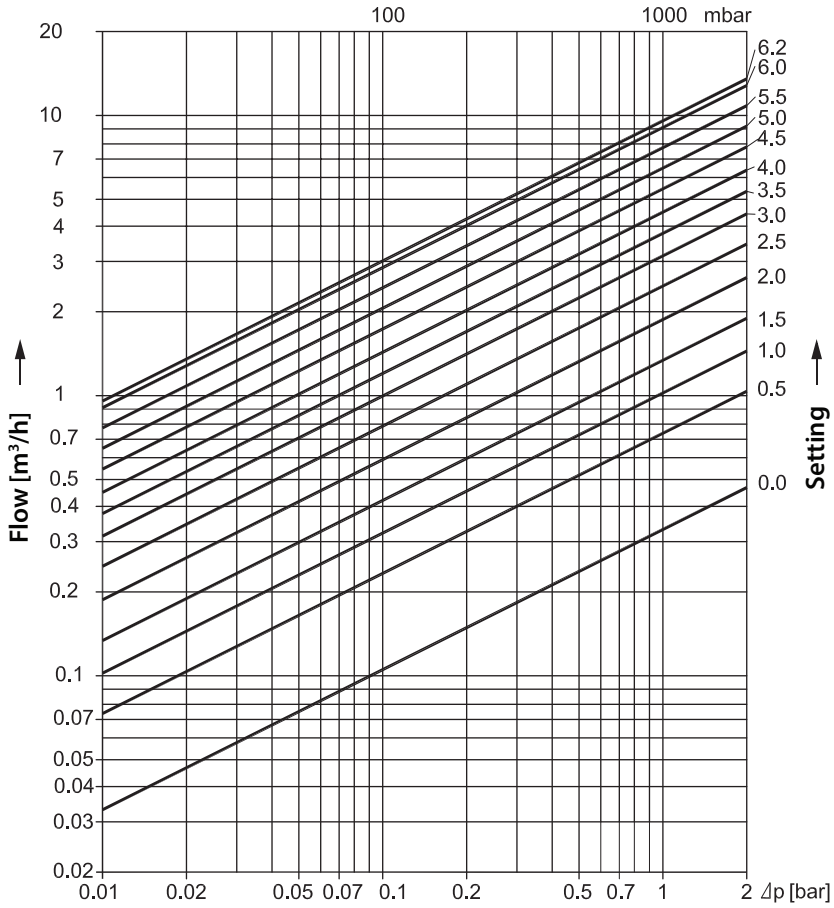


Flow characteristics

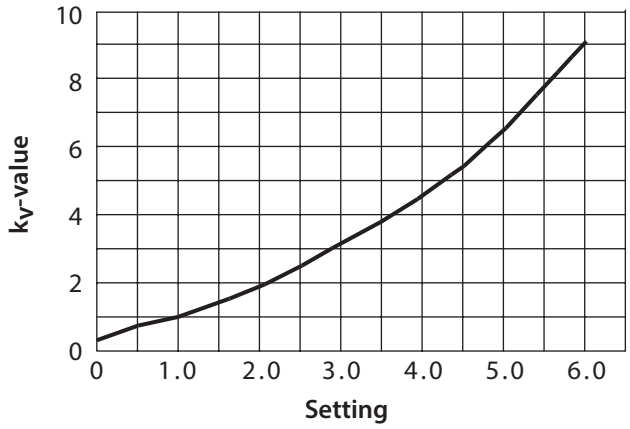


| Setting | $k_v$-value |
|---|---|
| 0.0 | 0.33 |
| 0.1 | 0.44 |
| 0.2 | 0.53 |
| 0.3 | 0.61 |
| 0.4 | 0.68 |
| 0.5 | 0.74 |
| 0.6 | 0.79 |
| 0.7 | 0.85 |
| 0.8 | 0.91 |
| 0.9 | 0.96 |
| 1.0 | 1.03 |
| 1.1 | 1.09 |
| 1.2 | 1.16 |
| 1.3 | 1.24 |
| 1.4 | 1.32 |
| 1.5 | 1.41 |
| 1.6 | 1.50 |
| 1.7 | 1.60 |
| 1.8 | 1.70 |
| 1.9 | 1.80 |
| 2.0 | 1.91 |
| 2.1 | 2.03 |
| 2.2 | 2.15 |
| 2.3 | 2.26 |
| 2.4 | 2.39 |
| 2.5 | 2.51 |
| 2.6 | 2.64 |
| 2.7 | 2.76 |
| 2.8 | 2.89 |
| 2.9 | 3.02 |
| 3.0 | 3.15 |
| 3.1 | 3.28 |
| 3.2 | 3.41 |
| 3.3 | 3.54 |
| 3.4 | 3.68 |
| 3.5 | 3.81 |
| 3.6 | 3.95 |
| 3.7 | 4.09 |
| 3.8 | 4.24 |
| 3.9 | 4.39 |
| 4.0 | 4.55 |
| 4.1 | 4.71 |
| 4.2 | 4.88 |
| 4.3 | 5.05 |
| 4.4 | 5.23 |
| 4.5 | 5.42 |
| 4.6 | 5.62 |
| 4.7 | 5.83 |
| 4.8 | 6.05 |
| 4.9 | 6.27 |
| 5.0 | 6.51 |
| 5.1 | 6.75 |
| 5.2 | 7.00 |
| 5.3 | 7.26 |
| 5.4 | 7.53 |
| 5.5 | 7.80 |
| 5.6 | 8.06 |
| 5.7 | 8.33 |
| 5.8 | 8.59 |
| 5.9 | 8.84 |
| 6.0 | 9.08 |
| 6.1 | 9.30 |
| 6.2 | 9.50 |

## Flow diagrammes, DN 32

LENO™ MSV-BD DN 32

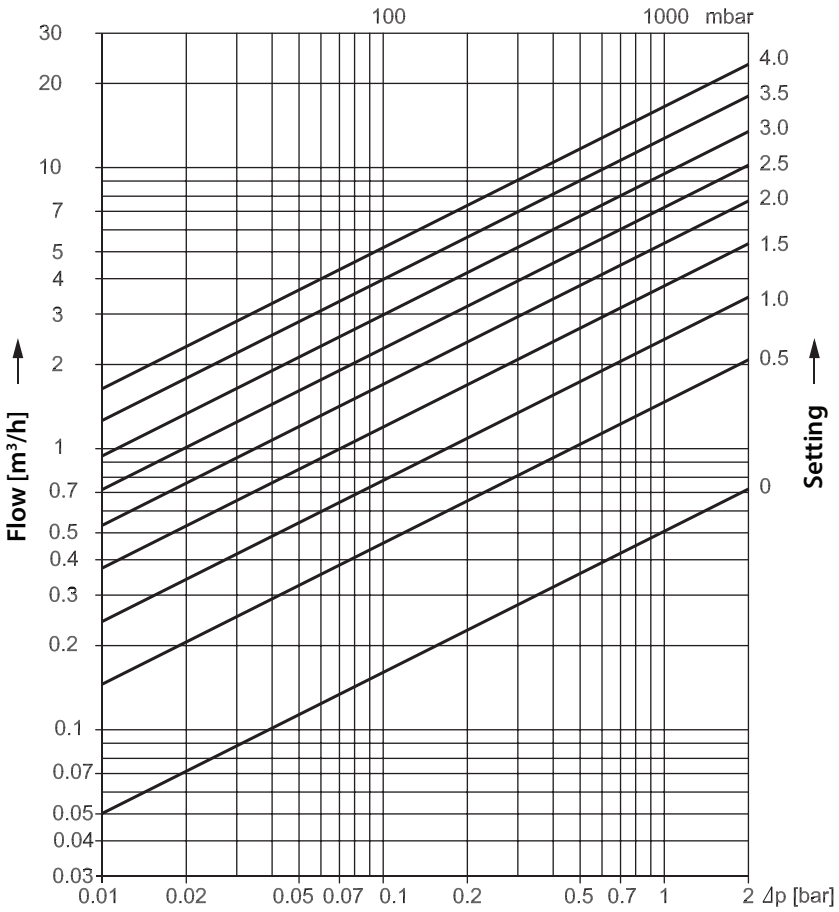


| Setting | $k_v$-value |
|---|---|
| 0.0 | 0.50 |
| 0.1 | 0.75 |
| 0.2 | 0.95 |
| 0.3 | 1.13 |
| 0.4 | 1.29 |
| 0.5 | 1.45 |
| 0.6 | 1.62 |
| 0.7 | 1.80 |
| 0.8 | 1.99 |
| 0.9 | 2.20 |
| 1.0 | 2.42 |
| 1.1 | 2.66 |
| 1.2 | 2.92 |
| 1.3 | 3.19 |
| 1.4 | 3.47 |
| 1.5 | 3.75 |
| 1.6 | 4.05 |
| 1.7 | 4.36 |
| 1.8 | 4.67 |
| 1.9 | 4.98 |
| 2.0 | 5.30 |
| 2.1 | 5.63 |
| 2.2 | 5.97 |
| 2.3 | 6.32 |
| 2.4 | 6.68 |
| 2.5 | 7.06 |
| 2.6 | 7.46 |
| 2.7 | 7.89 |
| 2.8 | 8.34 |
| 2.9 | 8.83 |
| 3.0 | 9.35 |
| 3.1 | 9.92 |
| 3.2 | 10.52 |
| 3.3 | 11.16 |
| 3.4 | 11.85 |
| 3.5 | 12.51 |
| 3.6 | 13.23 |
| 3.7 | 13.98 |
| 3.8 | 14.74 |
| 3.9 | 15.49 |
| 4.0 | 16.23 |
| 4.1 | 16.91 |
| 4.2 | 17.51 |
| 4.3 | 18.00 |

Flow characteristics

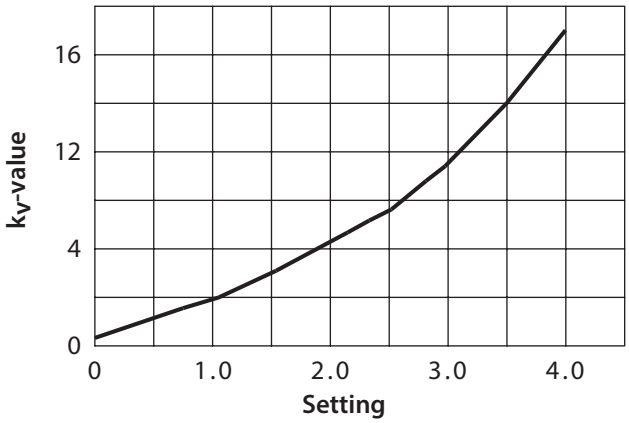

## Flow diagrammes, DN 40

LENO™ MSV-BD DN 40

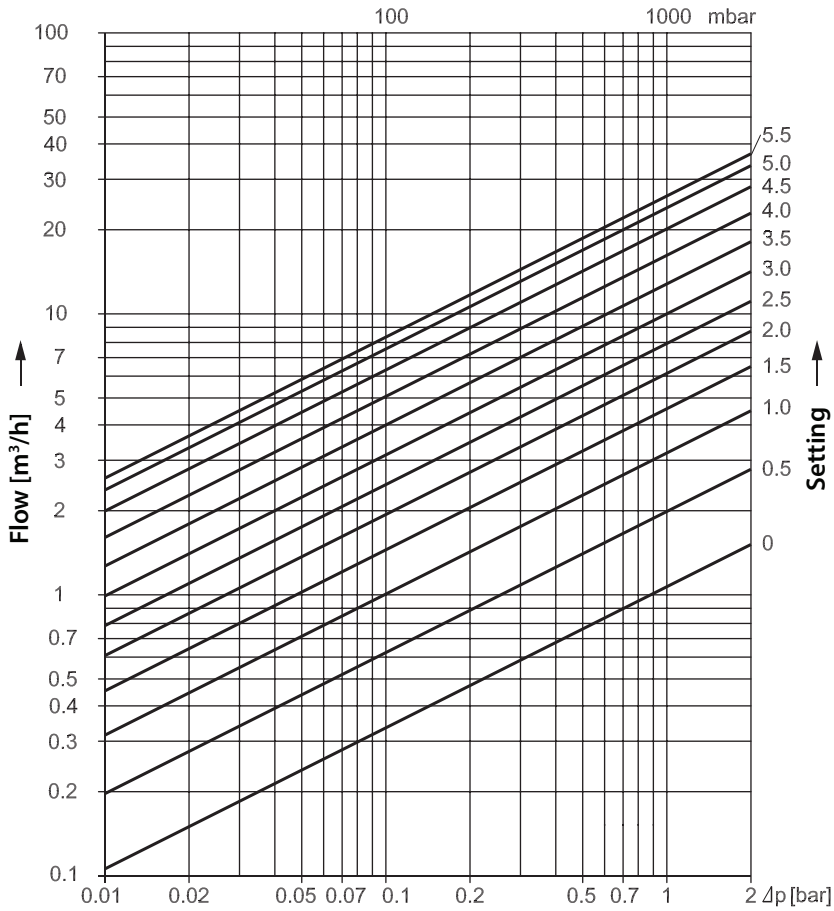


Flow characteristics

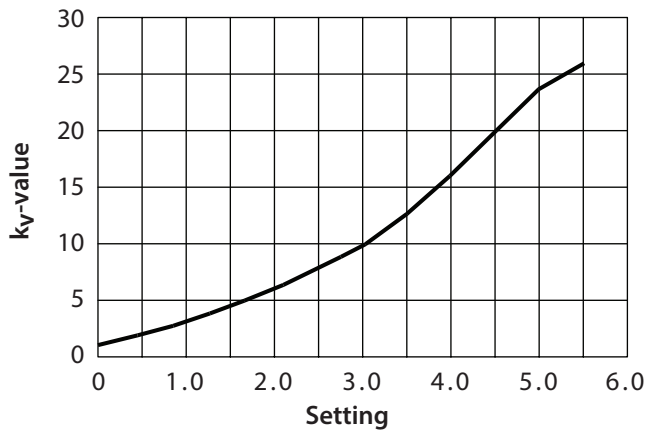


| Setting | $k_v$-value |
|---|---|
| 0.0 | 1.06 |
| 0.1 | 1.21 |
| 0.2 | 1.38 |
| 0.3 | 1.56 |
| 0.4 | 1.76 |
| 0.5 | 1.97 |
| 0.6 | 2.20 |
| 0.7 | 2.43 |
| 0.8 | 2.68 |
| 0.9 | 2.93 |
| 1.0 | 3.19 |
| 1.1 | 3.46 |
| 1.2 | 3.73 |
| 1.3 | 4.01 |
| 1.4 | 4.29 |
| 1.5 | 4.58 |
| 1.6 | 4.87 |
| 1.7 | 5.17 |
| 1.8 | 5.47 |
| 1.9 | 5.78 |
| 2.0 | 6.09 |
| 2.1 | 6.41 |
| 2.2 | 6.74 |
| 2.3 | 7.09 |
| 2.4 | 7.44 |
| 2.5 | 7.80 |
| 2.6 | 8.18 |
| 2.7 | 8.58 |
| 2.8 | 9.00 |
| 2.9 | 9.44 |
| 3.0 | 9.90 |
| 3.1 | 10.38 |
| 3.2 | 10.89 |
| 3.3 | 11.43 |
| 3.4 | 12.00 |
| 3.5 | 12.60 |
| 3.6 | 13.22 |
| 3.7 | 13.88 |
| 3.8 | 14.56 |
| 3.9 | 15.28 |
| 4.0 | 16.02 |
| 4.1 | 16.79 |
| 4.2 | 17.57 |
| 4.3 | 18.38 |
| 4.4 | 19.19 |
| 4.5 | 20.02 |
| 4.6 | 20.82 |
| 4.7 | 21.61 |
| 4.8 | 22.38 |
| 4.9 | 23.12 |
| 5.0 | 23.81 |
| 5.1 | 24.44 |
| 5.2 | 25.00 |
| 5.3 | 25.46 |
| 5.4 | 25.80 |
| 5.5 | 26.00 |

## Flow diagrammes, DN 50

LENO™ MSV-BD DN 50

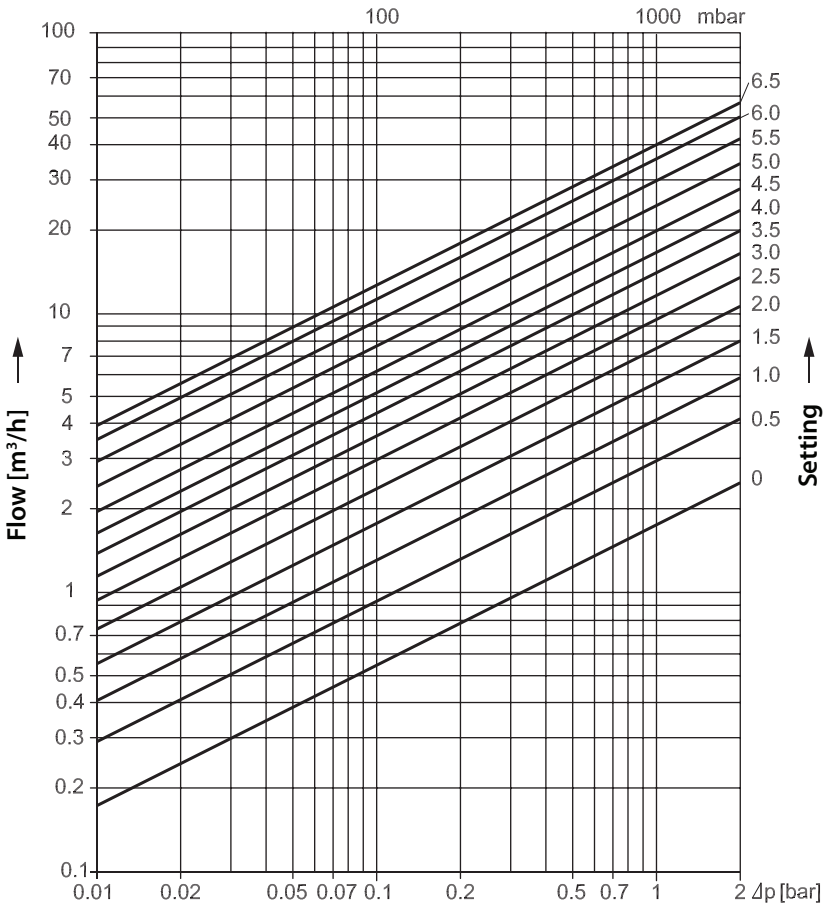


Flow characteristics

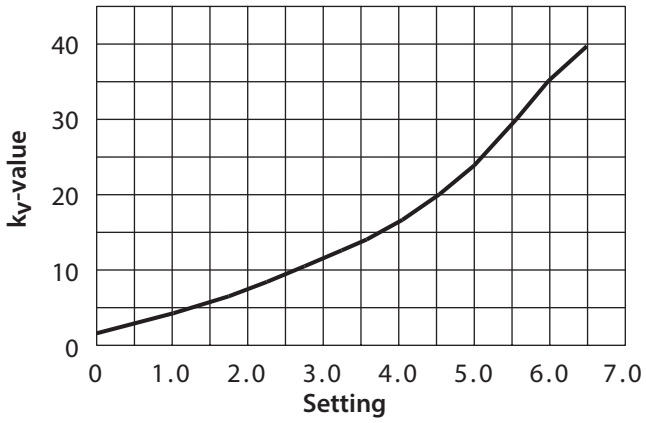


| Setting | $k_v$-value |
|---|---|
| 0.0 | 1.74 |
| 0.1 | 2.03 |
| 0.2 | 2.28 |
| 0.3 | 2.51 |
| 0.4 | 2.73 |
| 0.5 | 2.95 |
| 0.6 | 3.16 |
| 0.7 | 3.38 |
| 0.8 | 3.61 |
| 0.9 | 3.85 |
| 1.0 | 4.10 |
| 1.1 | 4.37 |
| 1.2 | 4.65 |
| 1.3 | 4.95 |
| 1.4 | 5.26 |
| 1.5 | 5.59 |
| 1.6 | 5.93 |
| 1.7 | 6.28 |
| 1.8 | 6.64 |
| 1.9 | 7.01 |
| 2.0 | 7.39 |
| 2.1 | 7.78 |
| 2.2 | 8.17 |
| 2.3 | 8.56 |
| 2.4 | 8.96 |
| 2.5 | 9.36 |
| 2.6 | 9.76 |
| 2.7 | 10.17 |
| 2.8 | 10.58 |
| 2.9 | 10.99 |
| 3.0 | 11.41 |
| 3.1 | 11.84 |
| 3.2 | 12.27 |
| 3.3 | 12.71 |
| 3.4 | 13.16 |
| 3.5 | 13.62 |
| 3.6 | 14.10 |
| 3.7 | 14.60 |
| 3.8 | 15.12 |
| 3.9 | 15.66 |
| 4.0 | 16.23 |
| 4.1 | 16.84 |
| 4.2 | 17.47 |
| 4.3 | 18.14 |
| 4.4 | 18.84 |
| 4.5 | 19.59 |
| 4.6 | 20.38 |
| 4.7 | 21.21 |
| 4.8 | 22.08 |
| 4.9 | 23.00 |
| 5.0 | 23.96 |
| 5.1 | 24.96 |
| 5.2 | 26.00 |
| 5.3 | 27.07 |
| 5.4 | 28.17 |
| 5.5 | 29.30 |
| 5.6 | 30.44 |
| 5.7 | 31.64 |
| 5.8 | 32.83 |
| 5.9 | 34.01 |
| 6.0 | 35.14 |
| 6.1 | 36.23 |
| 6.2 | 37.24 |
| 6.3 | 38.14 |
| 6.4 | 38.93 |
| 6.5 | 39.56 |
| 6.6 | 40.00 |

## Dimensions

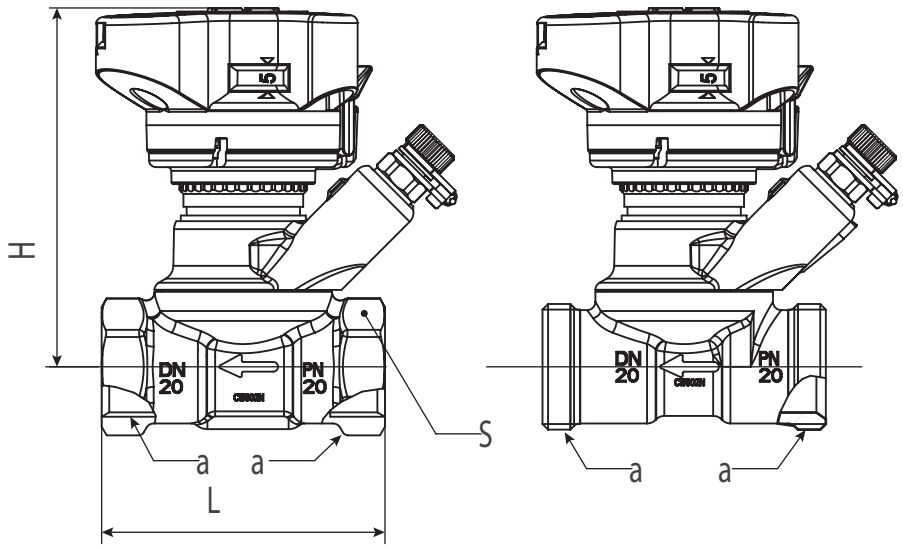


| MSV-BD | Size | a Thread ISO 228-1 | L (mm) | H (mm) | S (mm) |
|---|---|---|---|---|---|
| 003Z4000 | DN 15 LF | G ½ | 65 | 92 | 27 |
| 003Z4001 | DN 15 | G ½ | 65 | 92 | 27 |
| 003Z4002 | DN 20 | G ¾ | 75 | 95 | 32 |
| 003Z4003 | DN 25 | G 1 | 85 | 98 | 41 |
| 003Z4004 | DN 32 | G 1¼ | 98 | 121 | 50 |
| 003Z4005 | DN 40 | G 1½ | 100 | 125 | 55 |
| 003Z4006 | DN 50 | G 2 | 130 | 129 | 67 |
| 003Z4100 | DN 15 LF | G ¾ A | 70 | 92 | - |
| 003Z4101 | DN 15 | G ¾ | 70 | 92 | - |
| 003Z4102 | DN 20 | G 1 A | 75 | 95 | - |

## Tender specifications

*LENO™ MSV –BD can be used in heating, cooling and domestic hot water systems.*

| *Features* | *LENO™ MSV-BD* |
|---|---|
| *Balancing / Commissioning* | • |
| *Presetting* | • |
| *Fixed orifice* | |
| *Self sealing test plugs* | • |
| *Digital visible scale from more sides* | • |
| *Shut-off function (ball valve)* | • |
| *Draining / filling* | • |
| *Draining / filling on both sides of the valve* | • |
| *Removable handle* | • |
| *Closing indicator* | • |
| *Allen key for ball valve* | • |
| *Parallel test plugs* | • |
| *360° rotating measuring station (drain tap and test plugs)* | • |

*Presetting values are visible on top of the valve and from all sides.*
*Presetting is locked by pressing down the handle. When locked, the shut-off function can be used without changing the presetting.*
*The handle is released with the green key or with a 3 mm Allen key.*
*To prevent unintended changes of the presetting, the handle can be sealed by using a strip.*

*The system can be drained and filled on both sides of the ball valve.*

*External thread versions comes in sizes DN 15 and DN 20 and are prepared for Danfoss standard fittings. DN 15 is designed with Euro cone, according to DIN V 3838.*

*LENO™ MSV-BD has a leakage rate A according to ISO 5208, the ball valve is 100% tight.*

*The LENO™ MSV-BD measuring accuracy is 8% at 25% of max. setting.*
*Accuracy is according to BS 7350 : 1990.*

*Measuring instruments must be equipped with Ø3 mm measuring needles. Danfoss measuring instruments PFM 5001 contain all relevant valve data.*

*Valve sizes ..... DN 15 (LF) – DN 50*
*Pressure class ..... PN20*
*Static test pressure ..... 30 bar*
*Working temperature ..... -20°C to 120°C*
*Working area ..... 10-100% of the $k_{VS}$-value*

*The valve body is made of DZR brass.*
*The ball is made of chromium plated brass.*
*O-rings are made from EPDM rubber.*

Danfoss can accept no responsibility for possible errors in catalogues, brochures and other printed material. Danfoss reserves the right to alter its products without notice. This also applies to products already on order provided that such alterations can be made without subsequential changes being necessary in specifications already agreed.
All trademarks in this material are property of the respective companies. Danfoss and the Danfoss logotype are trademarks of Danfoss A/S. All rights reserved.