Manual presetting valve
MSV-F2, PN 16/25, DN 15 - 400

Description

MSV-F2 DN 15-150

MSV-F2 DN 200-400

MSV-F2 valves are manual presetting valves. They are used for balancing the flow in heating and cooling installations.

The valves have position indicator and stroke limiter as standard. Hood of spindle is integrated with stroke limiter.

Setting can be locked. Valve characteristics are set up in measuring device PFM 5001/PFM 100. Valves are free of asbestos.

Shut-off function.

Main data:

- DN 15-400
- PN 16:
  - Flow temperature: –10 °C … 130 °C
- PN 25:
  - Flow temperature: –10 °C … 150 °C
- Valves are mounted on flow or return pipe.

Application

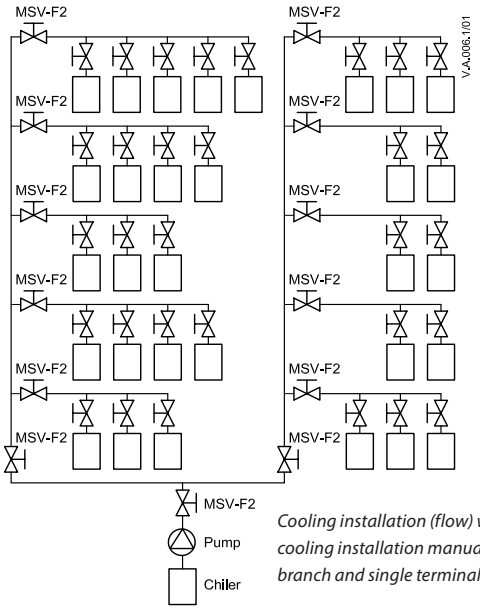

Cooling installation (flow) with manual presetting valves. In order to balance the cooling installation manual presetting valves should be mounted under each riser, branch and single terminal unit (LENO™ MSV-BD).

In constant flow installations MSV valves keeps constant pressure drop. Its value may be set on several levels depending on presetting.

Ordering

MSV-F2 valves - PN 16

Picture	DN [1] (mm)	k_{VS} (m^3/h)	$T_{max.}$ (°C)	PN (bar)	Code No. (with needle test plugs)
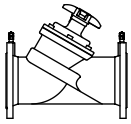	15	3,1	130	16	**003Z1085**
	20	6,3			**003Z1086**
	25	9,0			**003Z1087**
	32	15,5			**003Z1088**
	40	32,3			**003Z1089**
	50	53,8			**003Z1061**
	65	93,4			**003Z1062**
	80	122,3			**003Z1063**
	100	200,0			**003Z1064**
	125	304,4			**003Z1065**
	150	400,8			**003Z1066**
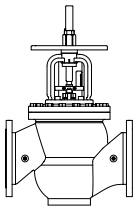	200	685,6			**003Z1067**
	250	952,3			**003Z1068**
	300	1.380,2			**003Z1069**
	350	2.046,1			**003Z1090**
	400	2.584,6			**003Z1091**

MSV-F2 valves - PN 25

Picture	DN [1] (mm)	k_{VS} (m^3/h)	$T_{max.}$ (°C)	PN (bar)	Code No. (with needle test plugs)
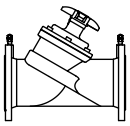	15	3,1	150	25	**003Z1092**
	20	6,3			**003Z1093**
	25	9,0			**003Z1094**
	32	15,5			**003Z1095**
	40	32,3			**003Z1096**
	50	53,8			**003Z1070**
	65	93,4			**003Z1071**
	80	122,3			**003Z1072**
	100	200,0			**003Z1073**
	125	304,4			**003Z1074**
	150	400,8			**003Z1075**
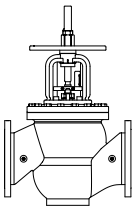	200	685,6			**003Z1076**
	250	952,3			**003Z1077**
	300	1.380,2			**003Z1078**
	350	2.046,1			**003Z1097**
	400	2.584,6			**003Z1098**

[1] *Flange valves dimension DN 15-40, 350 and 400 available on request.*

Accessories

Type	Code No.
Rectus test plugs, 2 pcs.	**003Z0108**
Standard test plugs with O-ring, 2 pcs.	**003Z0104**
Extension piece for test plugs 45 mm, 2 pcs.	**003Z0103**
Extended test plugs mounted under pressure, 2 pcs.	**003Z3946**
Flow measuring instrument PFM5001 (10 bar)	**003L8343**
Flow measuring instrument PFM5001 (20 bar)	**003L8344**
Flow measuring instrument PFM100 (10 bar)	**003L8260**

Type		Code No.
Hand-wheel	DN 15-50	**003Z0179**
	DN 65-150	**003Z0180**
	DN 200	**003Z0181**
	DN 250-300	**003Z0182**
	DN 350-400	**003Z0183**

Technical data

MSV-F2 valves - PN 16

Nominal diameter	DN	15	20	25	32	40	50	65	80	100	125	150	200	250	300	350	400
k_{VS}	m^3/h	3,1	6,3	9,0	15,5	32,3	53,8	93,4	122,3	200,0	304,4	400,8	685,6	952,3	1380,2	2046,1	2584,6
Nominal pressure	bar	16															
Max. pressure drop	bar	1,5															
Leakage rate		Grade A; According to ISO5208, Table 5 (No visible leakage)															
Flow medium		Water and water mixtures with secondary coolants (like glycols [1]) for closed heating and cooling systems															
Max. flow temperature	°C	130															
Connections		Flanges according to EN 1092-2															
Weight	kg	2,3	2,9	3,8	5,6	7,2	9,4	17	21	32	44	56,5	231	354	497	747	890
Material																	
Body		Cast iron EN-GJL 250 (GG 25)															
Seat sealing		EPDM															
Cone		CW602N											Casted stainless steel				

[1] *Please verefy compability between materials and secondary coolants with supplier.*

MSV-F2 valves - PN 25

Nominal diameter	DN	15	20	25	32	40	50	65	80	100	125	150	200	250	300	350	400
k_{VS}	m^3/h	3,1	6,3	9,0	15,5	32,3	53,8	93,4	122,3	200,0	304,4	400,8	685,6	952,3	1380,2	2046,1	2584,6
Nominal pressure	bar	25															
Max. pressure drop	bar	2,0															
Leakage rate		Grade A; According to ISO5208, Table 5 (No visible leakage)															
Flow medium		Water and water mixtures with secondary coolants (like glycols [1]) for closed heating and cooling systems															
Max. flow temperature	°C	150															
Connections		Flanges according to EN 1092-2															
Weight	kg	2,3	3,0	3,8	5,8	7,2	9,4	17	21	33	44	56,5	228	345	488	748	900
Material3, we ha																	
Body		Ductile iron EN-GJS 400-15 (GGG-40)															
Seat sealing		EPDM															
Cone		CW602N											Casted stainless steel				

[1] *Please verefy compability between materials and secondary coolants with supplier.*

Pressure-temperature classification (flanges according to EN 1092-2)

Material	**PN**		**Temperature**			
			–10 °C	120 °C	130 °C	150 °C
EN-GJL 250 (MSV-F2 DN 15-150)	16	bar	16	16	15,5	-
EN-GJL 250 (MSV-F2 DN 200-400)	16	bar	16	16	15,5	-
EN-GJS 400-15 (MSV-F2 DN 15-150)	25	bar	25	25	-	24,3
EN-GJS 400-15 (MSV-F2 DN 200-400)	25	bar	25	25	-	24,3

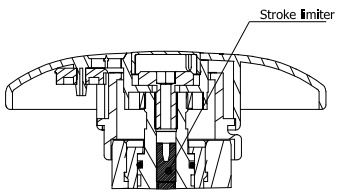

Valves have built in flow limitation

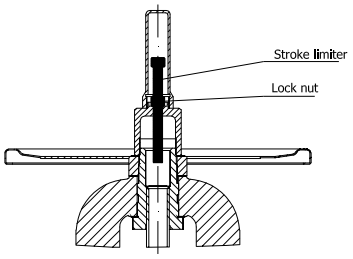

Valves have stroke limiter locked by lock-nut

Design

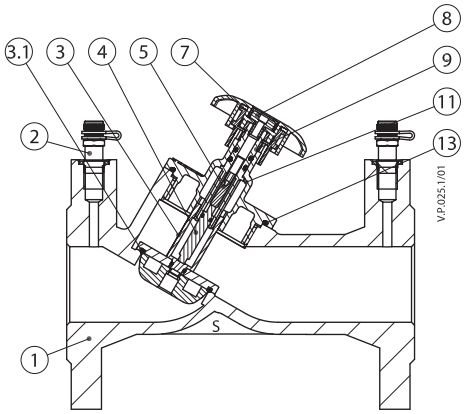

MSV-F2 DN 15-40

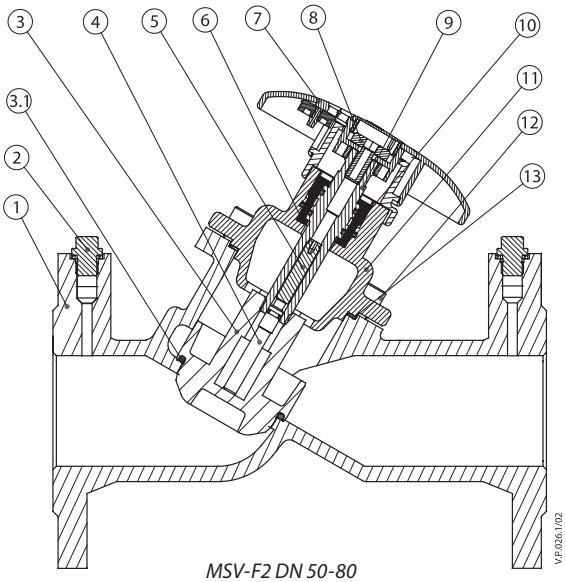

MSV-F2 DN 50-80

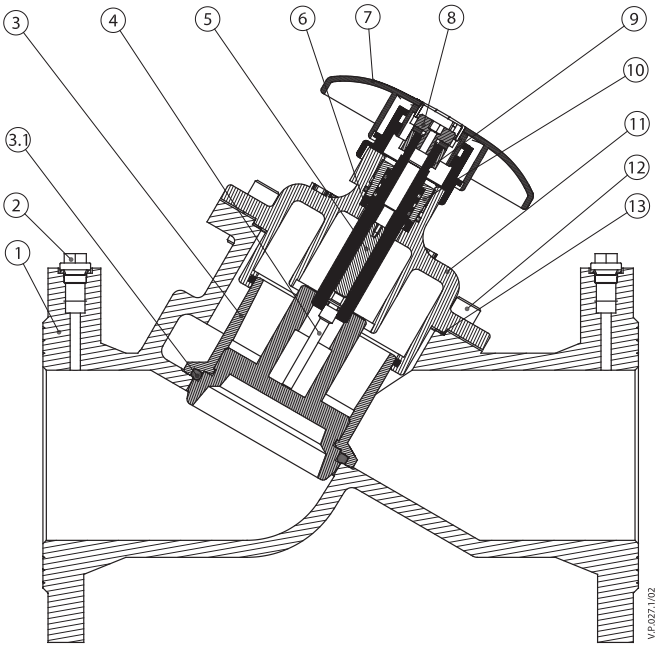

MSV-F2 DN 100-150

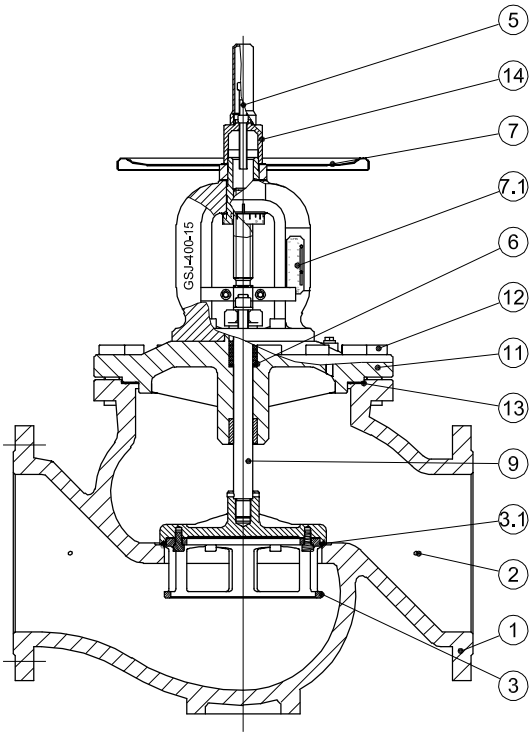

MSV-F2 DN 200-400

1 Body EN-GJL250
2 Plug
3 Valve cone
3,1 Seat soft sealing
4 Rod
5 Stroke limiter/Allen screw
6 Gasket
7 Handwheel with digital display
- DN 15-150 plastic
- DN 200-400 metal

7,1 Display
8 Fixed screw
9 Spindle
10 Stuffing box
11 Bonnet
12 Allen screw /Hexagon screw
13 Flat gasket
14 Hood with stroke

Setting

Ethylenglycol correction factor

Formula: $C_2H_6O_2$
Density at 20 °C: $\rho_{water} = 1\ kg/dm^3$
$\rho_{glycol} = 1{,}338\ kg/dm^3$

$$Q_{corr.} = \frac{Q_{water}}{\sqrt{\text{Share of water} \times \rho_{water} + \text{Share of glycol} \times \rho_{glycol}}}$$

Ethylenglycol part xg (%)	0	10	20	30	40	50	60	70	80	90	100
Correction factor	1,0	0,983	0,968	0,953	0,939	0,925	0,912	0,899	0,887	0,876	0,864

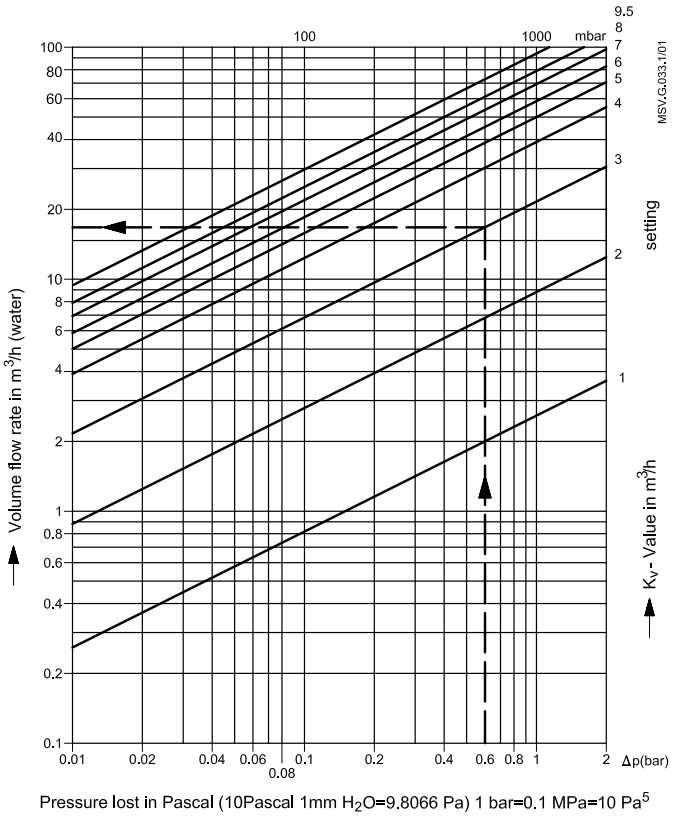

MSV-F2 DN 65
Δp = 0,6 bar
Hand wheel setting: 3,0
Flow: 16,8 m³/h
30 % glycol
$Q_{corr.}$ = 16,8 m³/h × 0,953 = 16,0 m³/h
It refers to all types of valves.

Installation

Always install the valve with the arrow on the body in the same direction as the flow. In order to avoid turbulence, which will affect the measuring accuracy, it is recommended to have a straight length of pipe up and down stream from the valve as shown (D - diameter of pipe).

The influence of turbulence, if our recommendations are not adhered to, can influence the flow up to 20 %.

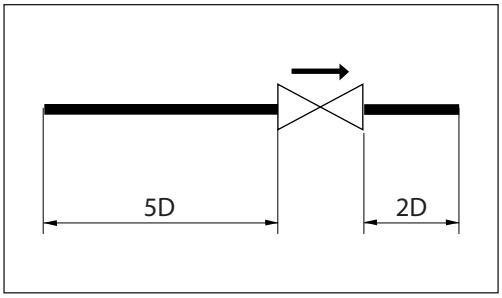

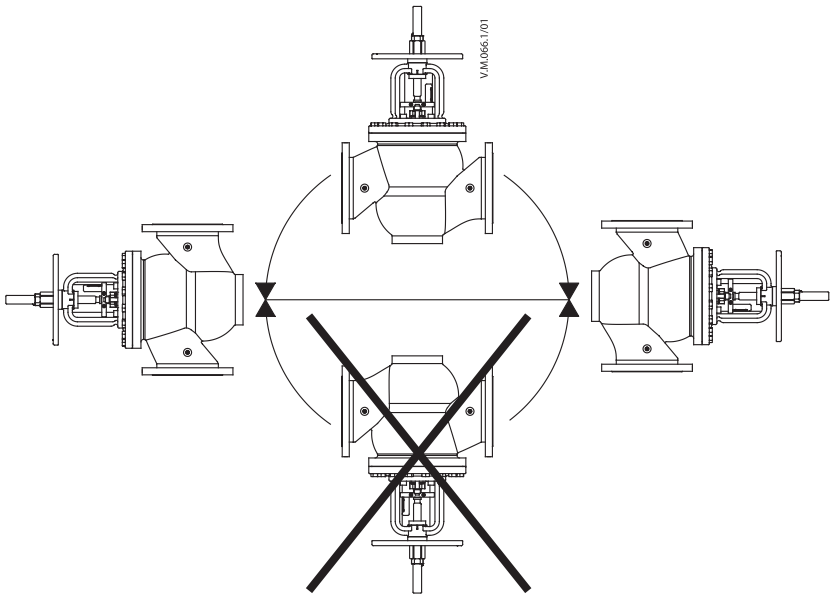

MSV F2 DN 200-400 may not be mounted with handle pointing down.

Sizing

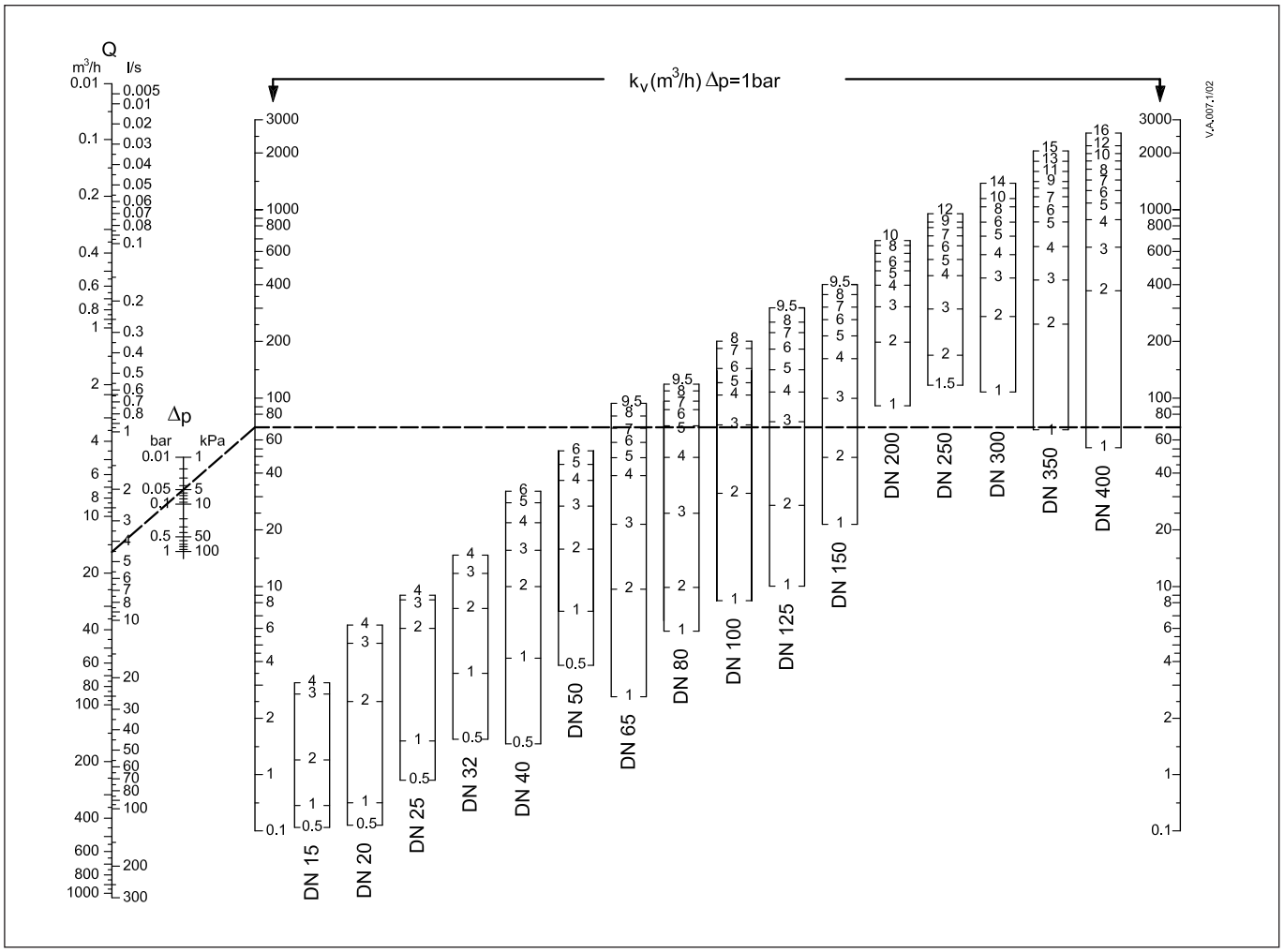

Example:
MSV-F2 DN 65
Q = 16 m³/h
Δp = 5 kPa

Calculation of setting for valve:
In the diagram a straight line connecting the bars for flow 16 m³/h, differential pressure 5 kPa and k_v value shows the relationship between these three variables.

A horizontal line from intersection with the k_v bar shows the presetting value for each valve size.

Result:
presetting 7,0

Flow diagrams

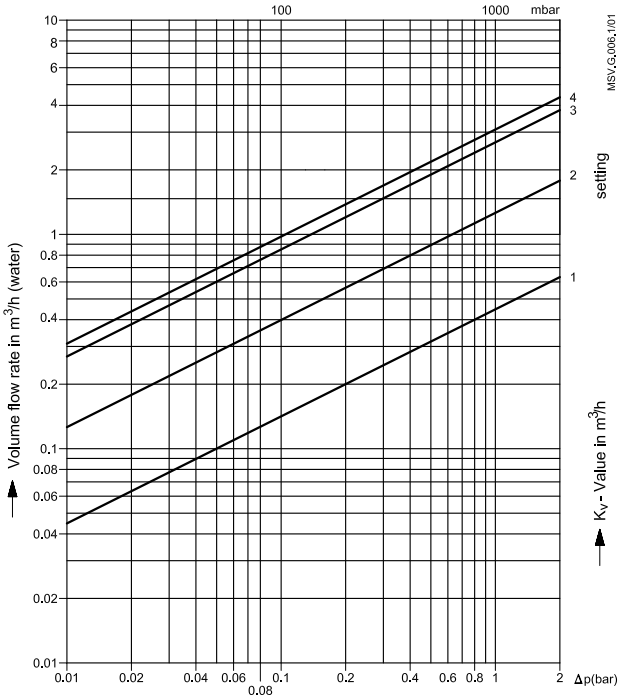

DN 15 / PN 16 / PN 25

Setting	k_v-value
1	0,45
2	1,26
3	2,73
4	3,09

Max. permissible differential pressure in throttling function 1,5/2,0 bar.
Max. permissible flow speed: ≤ 4 m/s
Condition:

- The flow must be free of cavitation.

Flow characteristic

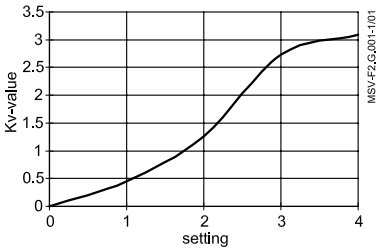

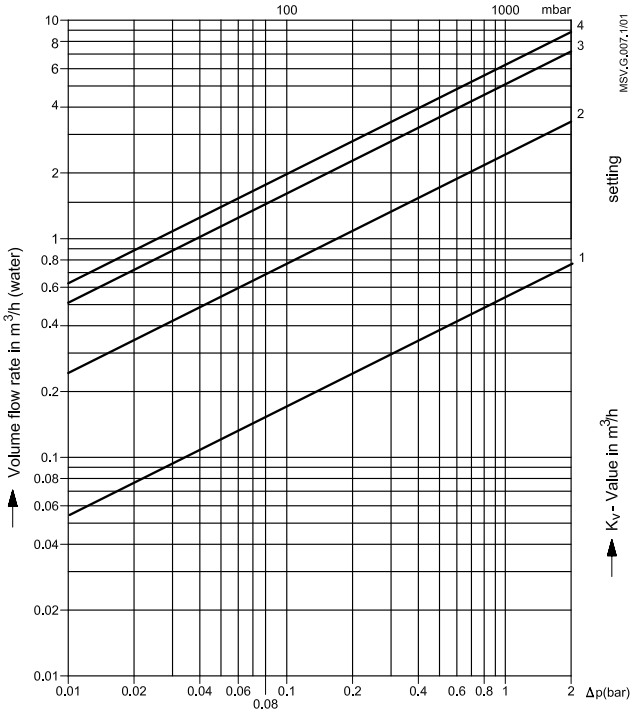

DN 20 / PN 16 / PN 25

Setting	k_v-value
1	0,54
2	2,48
3	5,11
4	6,26

Max. permissible differential pressure in throttling function 1,5/2,0 bar.
Max. permissible flow speed: ≤ 4 m/s
Condition:

- The flow must be free of cavitation.

Flow characteristic

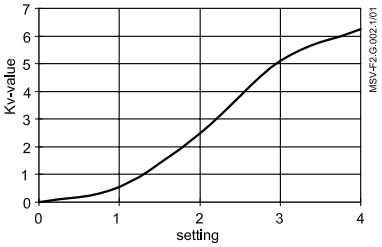

Flow diagrams *(continued)*

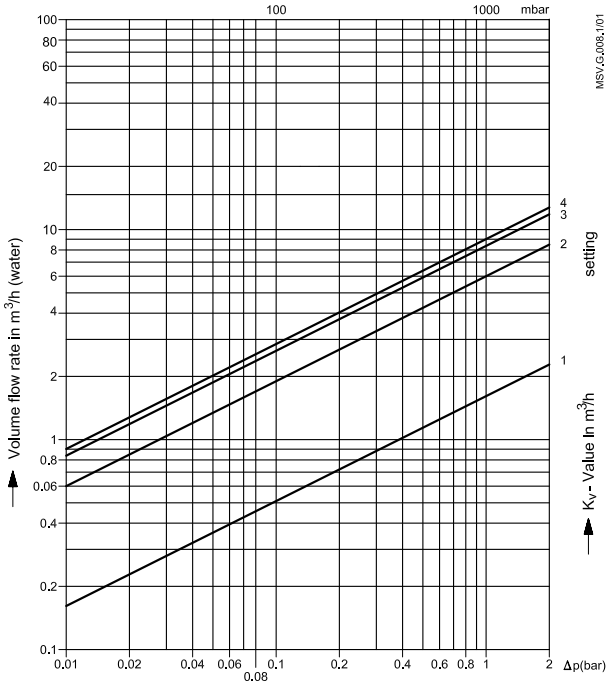

Pressure lost in Pascal (10Pascal 1mm H_2O=9.8066 Pa) 1 bar=0.1 MPa=10 Pa[5]

DN 25 / PN 16 / PN 25

Setting	k_v-value
1	1,61
2	6,0
3	8,38
4	9,01

Max. permissible differential pressure in throttling function 1,5/2,0 bar.
Max. permissible flow speed: ≤ 4 m/s
Condition:

- The flow must be free of cavitation.

Flow characteristic

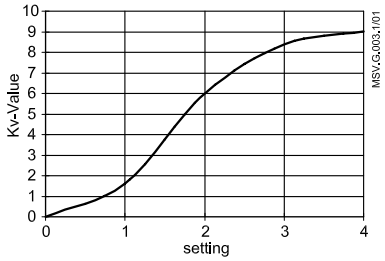

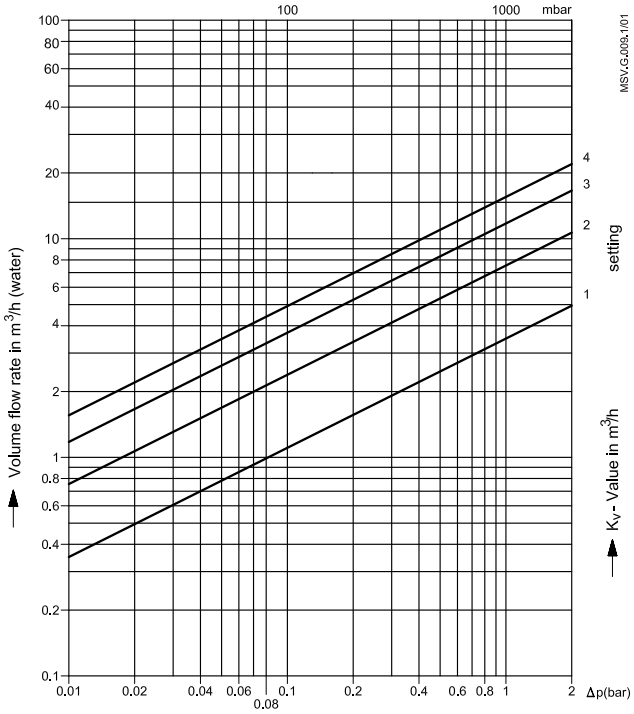

Pressure lost in Pascal (10Pascal 1mm H_2O=9.8066 Pa) 1 bar=0.1 MPa=10 Pa[5]

DN 32 / PN 16 / PN 25

Setting	k_v-value
1	3,53
2	7,56
3	12,32
4	15,54

Max. permissible differential pressure in throttling function 1,5/2,0 bar.
Max. permissible flow speed: ≤ 4 m/s
Condition:

- The flow must be free of cavitation.

Flow characteristic

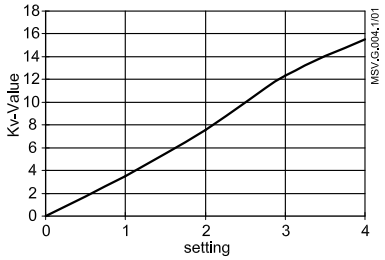

Flow diagrams *(continued)*

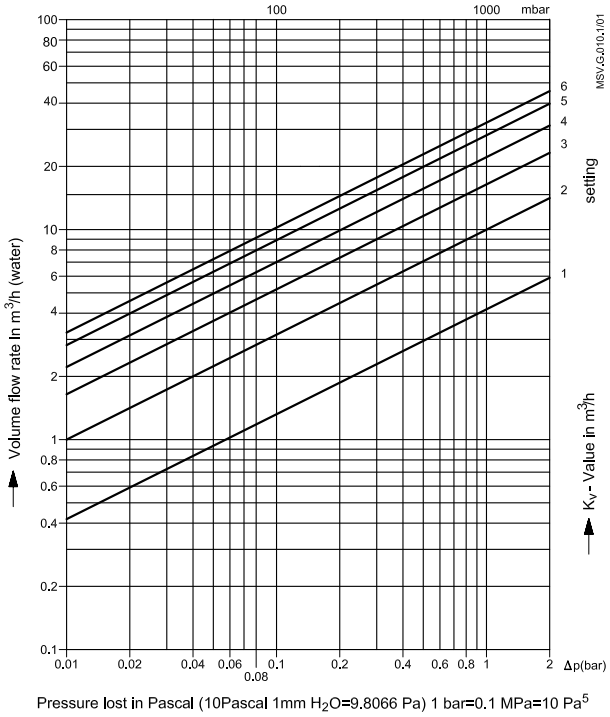

DN 40 / PN 16 / PN 25

Setting	k_v-value
1	4,19
2	9,98
3	16,42
4	22,13
5	28,14
6	32,31

Max. permissible differential pressure in throttling function 1,5/2,0 bar.
Max. permissible flow speed: ≤ 4 m/s
Condition:

- The flow must be free of cavitation.

Flow characteristic

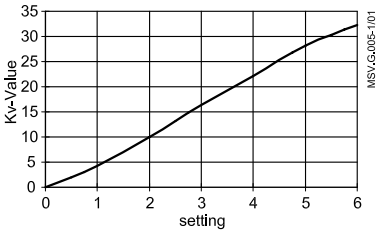

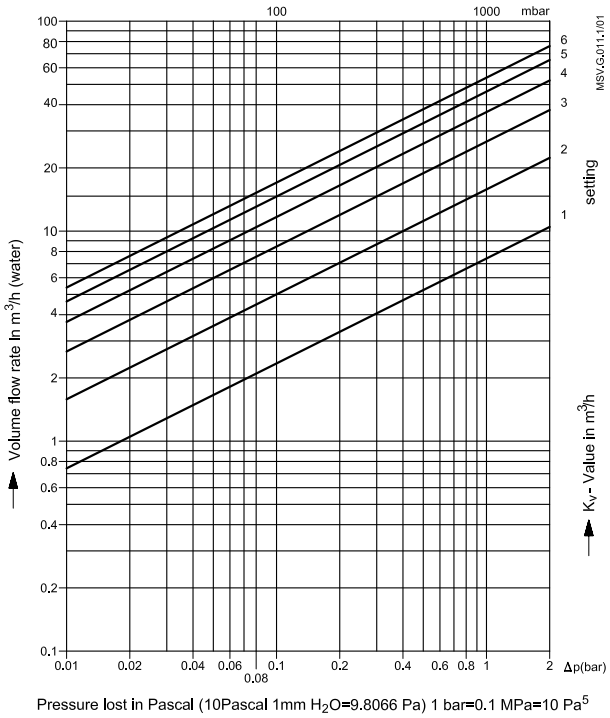

DN 50 / PN 16 / PN 25

Setting	k_v-value
1	7,4
2	15,8
3	26,7
4	36,9
5	46,2
6	53,8

Max. permissible differential pressure in throttling function 1,5/2,0 bar.
Max. permissible flow speed: ≤ 4 m/s
Condition:

- The flow must be free of cavitation.

Flow characteristic

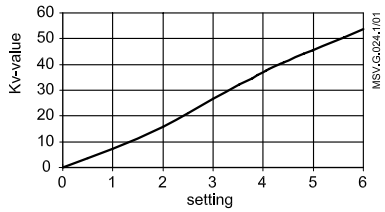

Flow diagrams *(continued)*

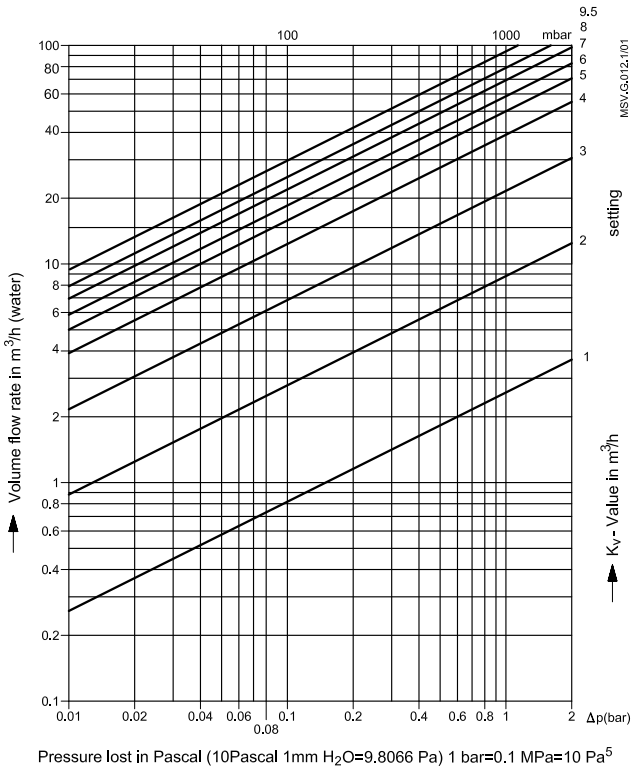

DN 65 / PN 16 / PN 25

Setting	k_v-value
1	2,6
2	8,8
3	21,6
4	39,0
5	49,8
6	58,5
7	69,3
8	79,0
9	87,8
9,5	93,4

Max. permissible differential pressure in throttling function 1,5/2,0 bar.
Max. permissible flow speed: ≤ 4 m/s
Condition:

- The flow must be free of cavitation.

Flow characteristic

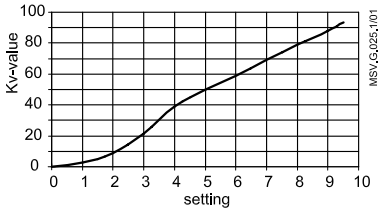

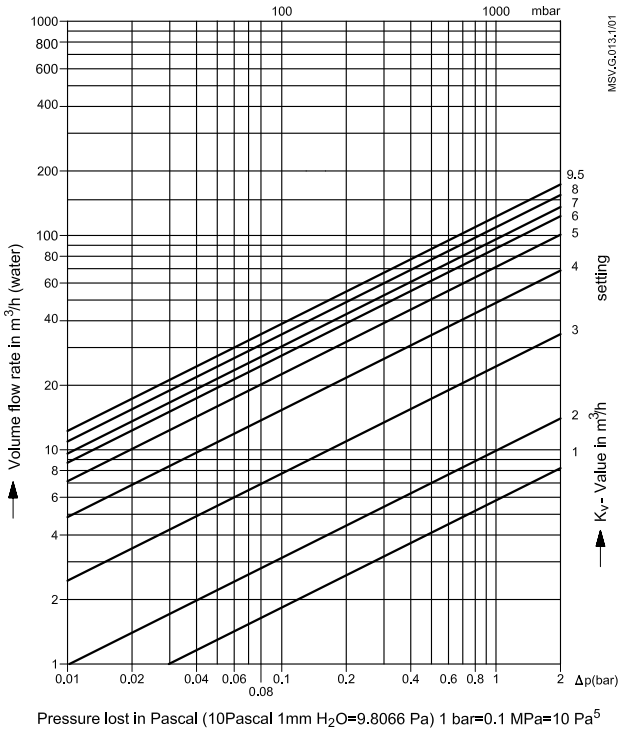

DN 80 / PN 16 / PN 25

Setting	k_v-value
1	5,8
2	9,9
3	24,5
4	48,5
5	71,3
6	87,0
7	96,4
8	109,3
9,5	122,3

Max. permissible differential pressure in throttling function 1,5/2,0 bar.
Max. permissible flow speed: ≤ 4 m/s
Condition:

- The flow must be free of cavitation.

Flow characteristic

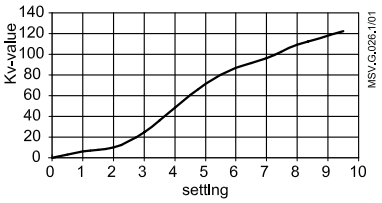

Flow diagrams *(continued)*

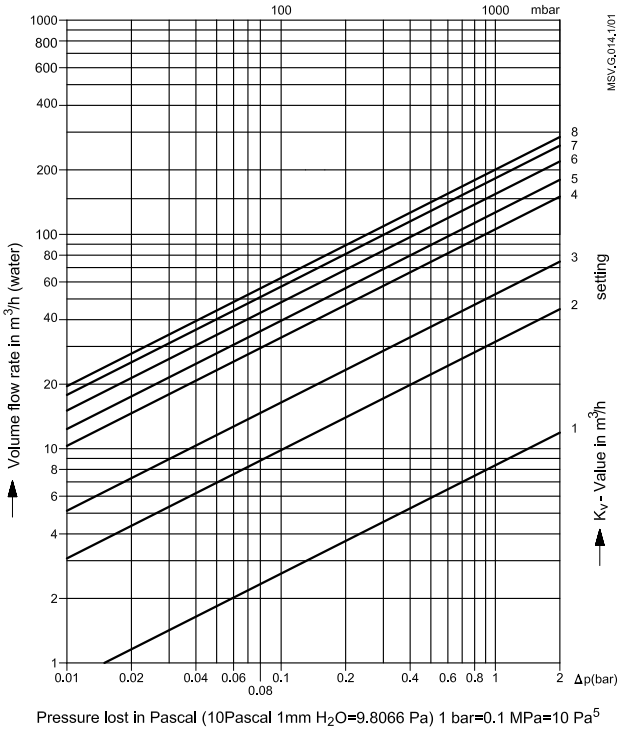

DN 100 / PN 16 / PN 25

Setting	k_v-value
1	8,3
2	32,4
3	72,9
4	107,2
5	128,2
6	152,8
7	180,0
8	200,0

Max. permissible differential pressure in throttling function 1,5/2,0 bar.
Max. permissible flow speed: ≤ 4 m/s
Condition:

- The flow must be free of cavitation.

Flow characteristic

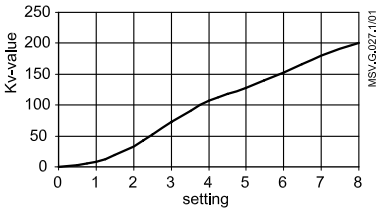

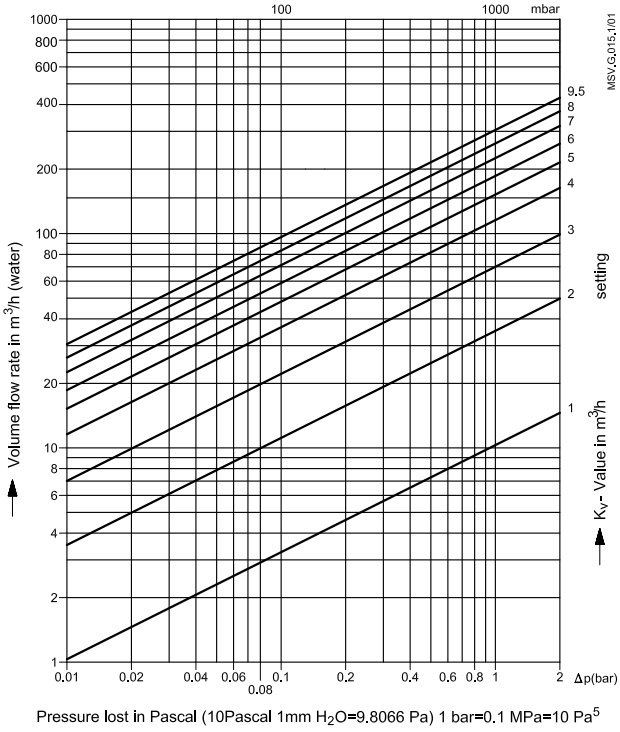

DN 125 / PN 16 / PN 25

Setting	k_v-value
1	10,3
2	35,4
3	73,0
4	114,9
5	150,5
6	185,2
7	225,1
8	261,1
9	294,2
9,5	304,4

Max. permissible differential pressure in throttling function 1,5/2,0 bar.
Max. permissible flow speed: ≤ 4 m/s
Condition:

- The flow must be free of cavitation.

Flow characteristic

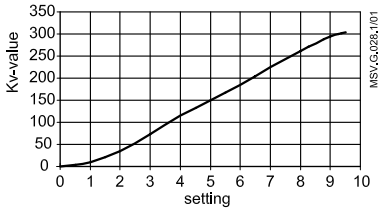

Flow diagrams *(continued)*

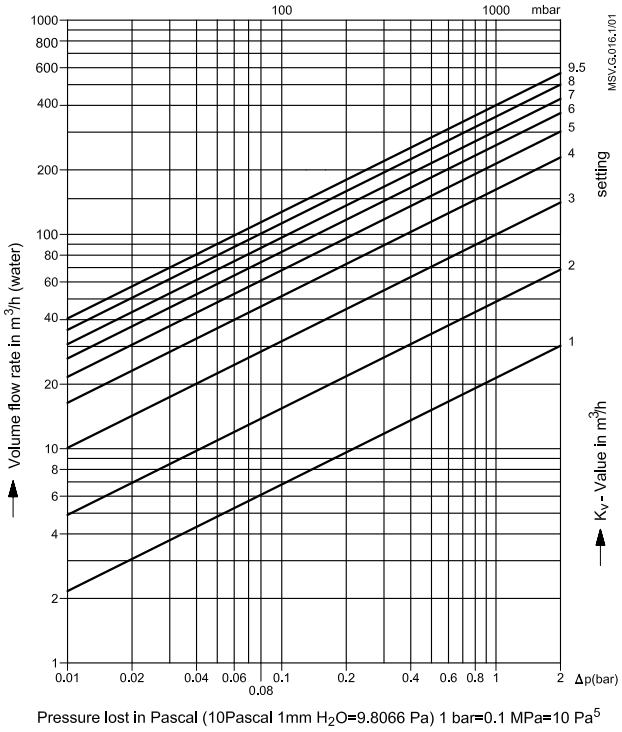

DN 150 / PN 16 / PN 25

Setting	k_v-value
1	21,4
2	48,5
3	99,8
4	162,0
5	214,0
6	260,9
7	304,1
8	354,6
9,5	400,8

Max. permissible differential pressure in throttling function 1,5/2,0 bar.
Max. permissible flow speed: ≤ 4 m/s
Condition:

- The flow must be free of cavitation.

Flow characteristic

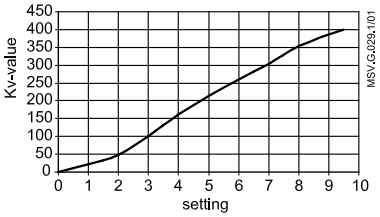

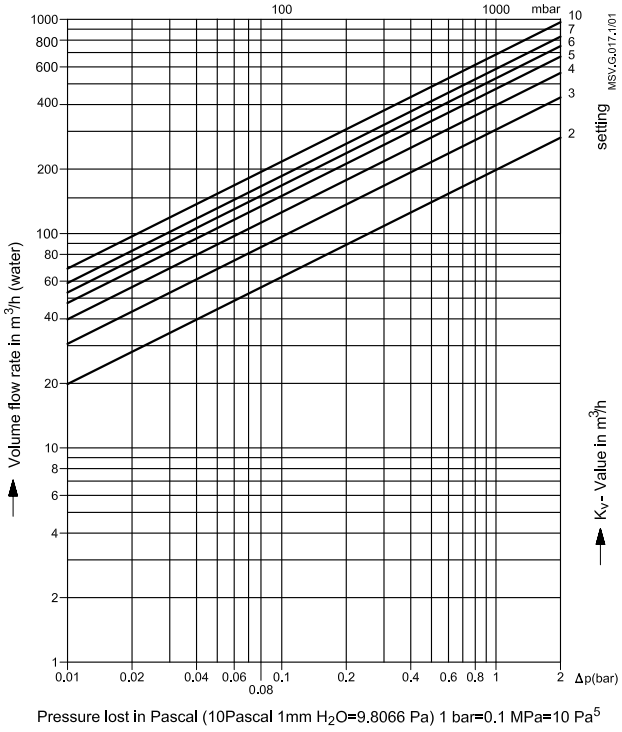

DN 200 / PN 16 / PN 25

Setting	k_v-value
2	198,2
3	305,3
4	397,5
5	474,0
6	530,4
7	586,8
8	645,9
10	685,6

Max. permissible differential pressure in throttling function 1,5/2,0 bar.
Max. permissible flow speed: ≤ 4 m/s
Condition:

- The flow must be free of cavitation.

Flow characteristic

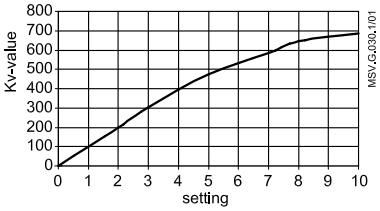

Flow diagrams *(continued)*

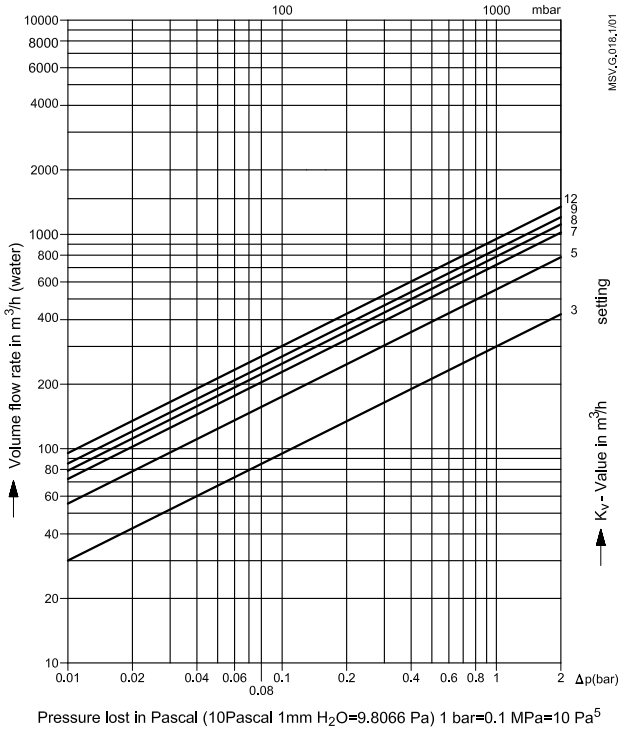

DN 250 / PN 16 / PN 25

Setting	k_v-value
3	299,4
5	553,1
7	721,2
8	788,1
9	851,1
10	926,1
12	952,3

Max. permissible differential pressure in throttling function 1,5/2,0 bar.
Max. permissible flow speed: ≤ 4 m/s
Condition:

- The flow must be free of cavitation.

Flow characteristic

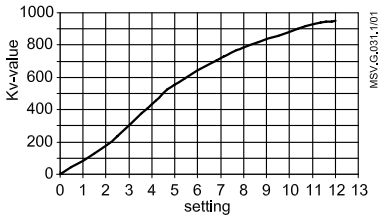

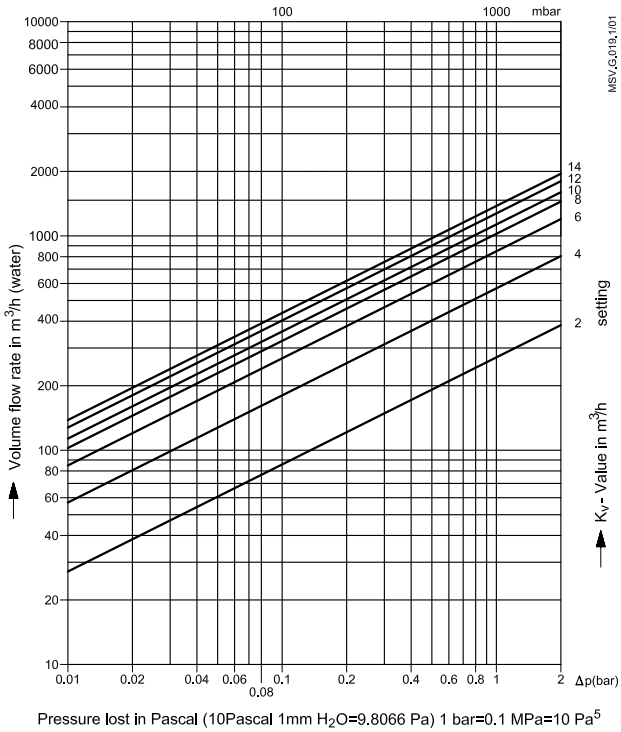

DN 300 / PN 16 / PN 25

Setting	k_v-value
2	270,9
4	575,8
6	856,0
8	1035,9
10	1142,8
12	1273,7
14	1380,2

Max. permissible differential pressure in throttling function 1,5/2,0 bar.
Max. permissible flow speed: ≤ 4 m/s
Condition:

- The flow must be free of cavitation.

Flow characteristic

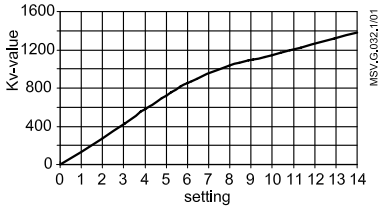

Flow diagrams *(continued)*

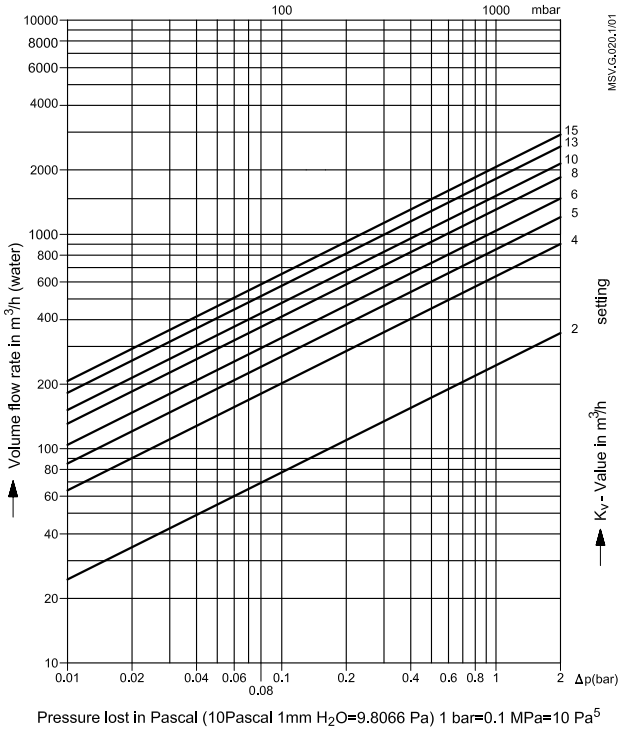

DN 350 / PN 16 / PN 25

Setting	k_v-value
2	249,06
4	634,4
5	844,72
6	1041,93
8	1369,45
10	1580,67
13	1844,74
15	2046,14

Max. permissible differential pressure in throttling function 1,5/2,0 bar.
Max. permissible flow speed: ≤ 4 m/s
Condition:

- The flow must be free of cavitation.

Flow characteristic

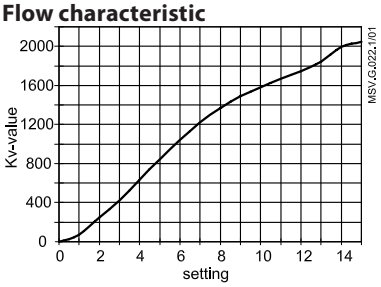

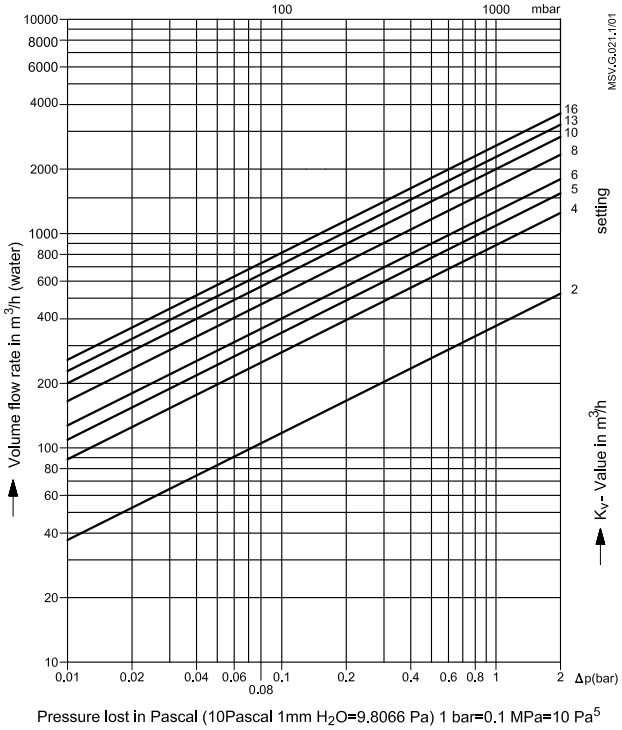

DN 400 / PN 16 / PN 25

Setting	k_v-value
2	371,75
4	875,26
5	1109,31
6	1328,86
8	1705,24
10	1980,56
13	2287,81
16	2584,95

Max. permissible differential pressure in throttling function 1,5/2,0 bar.
Max. permissible flow speed: ≤ 4 m/s
Condition:

- The flow must be free of cavitation.

Flow characteristic

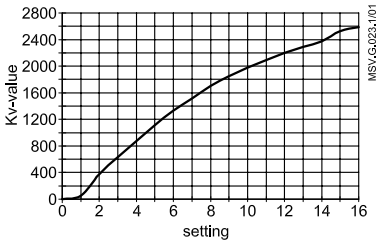

Dimensions

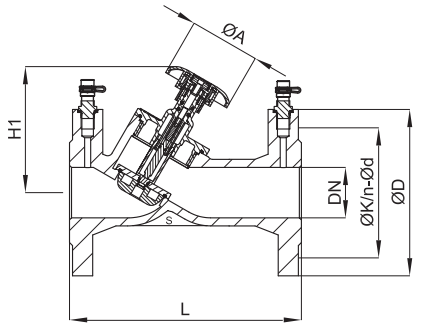

MSV-F2 DN 15-50

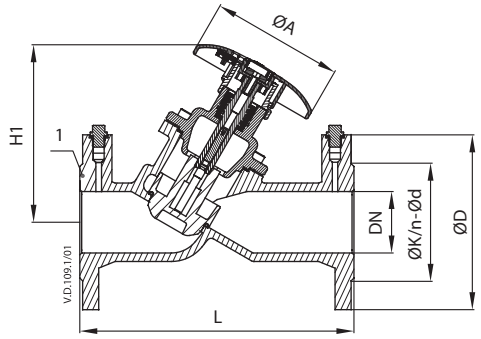

MSV-F2 DN 50-80

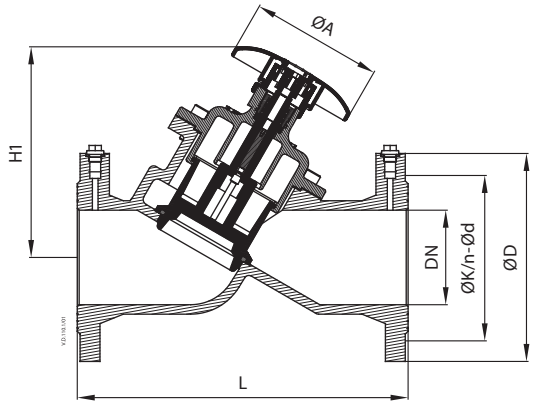

MSV-F2 DN 100-150

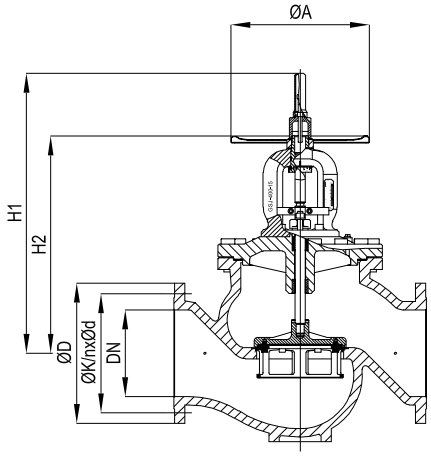

MSV-F2 DN 200-400

DN	L	H1	H2	ØA	PN 16			PN 25		
					ØD	ØK	n × Ød	ØD	ØK	n × Ød
	mm									
15	130	80	-	78	95	65	4 × 14	95	65	4 × 14
20	150	90	-	78	105	75	4 × 14	105	75	4 × 14
25	160	105	-	78	115	85	4 × 14	115	85	4 × 14
32	180	110	-	78	140	100	4 × 19	140	100	4 × 19
40	200	125	-	78	150	110	4 × 19	150	110	4 × 19
50	230	125	-	78	165	125	4 × 19	165	125	4 × 19
65	290	187	-	140	185	145	4 × 19	185	145	8 × 19
80	310	205	-	140	200	160	8 × 19	200	160	8 × 19
100	350	222	-	140	220	180	8 × 19	235	190	8 × 23
125	400	251	-	140	250	210	8 × 19	270	220	8 × 28
150	480	247	-	140	285	240	8 × 23	300	250	8 × 28
200	600	721	533	360	340	295	12 × 23	360	310	12 × 28
250	730	808	617	400	405	355	12 × 28	425	370	12 × 31
300	850	855	664	400	460	410	12 × 28	485	430	16 × 31
350	980	910	729	500	520	470	16 × 28	555	490	16 × 34
400	1100	960	762	500	580	525	16 × 31	620	550	16 × 37

Remark: "n" is number of holes in the flange.

Danfoss can accept no responsibility for possible errors in catalogues, brochures and other printed material. Danfoss reserves the right to alter its products without notice. This also applies to products already on order provided that such alterations can be made without subsequential changes being necessary in specifications already agreed.
All trademarks in this material are property of the respective companies. Danfoss and the Danfoss logotype are trademarks of Danfoss A/S. All rights reserved.