Actuator for modulating control
AME 435

Description

AME 435 actuator is used with two and three-way valves type VRB, VRG, VF and VL up to DN 80 diameter.

The actuator has some special features:
- it automatically adapts its stroke to the valve end positions which reduces commissioning time (self stroking)
- valve flow adjustment feature; flow can be variably-adjusted from linear to logarithmic or opposite.
- energy saving, cost reducing and energy efficiency improving anti-oscillation function
- the advanced design incorporates load related 'switch-off' to ensure that actuators and valves are not exposed to overload

Combinations with other valves could be seen under Accessories.

Main data:
- Nominal voltage (AC or DC):
  - 24 V, 50 Hz/60 Hz
- Control input signal:
  - 0(4)-20 mA
  - 0(2)-10 V
- Force: 400 N
- Stroke: 20 mm
- Speed (selectable):
  - 7,5 s/mm
  - 15 s/mm
- Max. medium temperature: 130 °C
- Self stroking
- LED signalling
- External RESET button
- Output signal
- Manual operation

Ordering

Actuator

Type	Power supply (V)	Code No.
AME 435	24 AC/DC	**082H0161**

Accessories-**Stem heater**

Type	DN	Code No.
Stem heater	15-80	**065Z0315**

Accessories-**Adapter**

Valves	DN	max. Δp (bar)	Code No.
For old valves VRB, VRG, VF, VL	15	9	**065Z0313**
	20	4	
	25	2	
	32	1	
	40	0,8	
	50	0,5	

Technical data

Power supply	V	24 AC/DC; ±10%
Power consumption	VA	4,5
Frequency	Hz	50/60
Control input Y	V	0-10 (2-10); Ri = 95 kΩ
	mA	0-20 (4-20); Ri = 500 Ω
Output signal X	V	0-10 (2-10); RL = 650 Ω (maximal load)
Closing force	N	400
Max. stroke	mm	20
Speed	s/mm	7,5 or 15
Max. medium temperature	°C	130
Ambient temperature		0 … 55
Storage and transport temperature		–40 … 70
Protection class		II
Grade of enclosure		IP 54
Weight	kg	0,45
CE - marking in accordance with standards		Low Voltage Directive (LVD) 2006/95/EC: EN 60730-1, EN 60730-2-14 EMC Directive 2004/108/EC: EN 61000-6-2, EN 61000-6-3

Installation

Mechanical

No tool is required to mount actuator on the valve. Installation of the valve with the actuator is allowed in horizontal position or upwards. Installation downwards is not allowed.

The actuator must not be installed in an explosive atmosphere, at ambient temperature lower than 0 °C or at ambient temperature higher than 55 °C. It must not be subject to steam jets, water jets or dripping liquid as well.

Note:
The actuator may be rotated up to 360° with respect to the valve stem by loosening the retaining fixture. Once the actuator is placed, retighten the fixture.

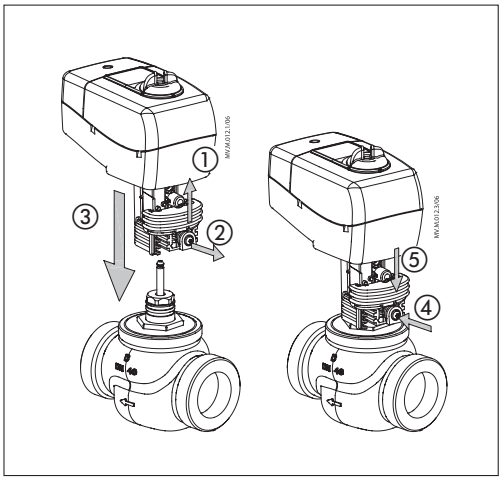

Electrical

Electrical connections can be accessed by removing the actuator cover. Two cable gland entries without thread (Ø16 and combined Ø16/Ø20) are prepared for cable glands. From factory one entry is provided by rubber cable gland and the other entry is prepared for opening.

Note:
Cable and cable gland used must not compromise the actuator's IP rating, and must ensure the connectors are fully strain relieved.
Rubber cable gland delivered from factory does not compromise IP rating but it does not provide fully strain relieve according to LVD directive.
Please observe local rules and regulations as well.

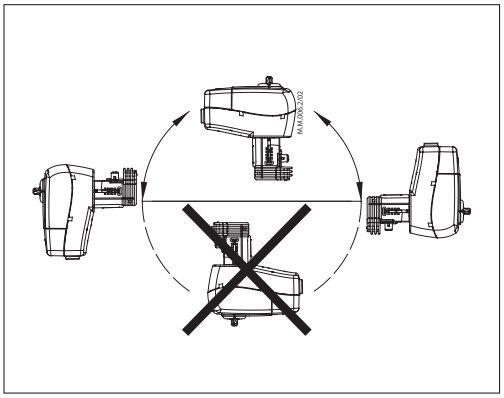

Jumper/DIP switch setting

Jumper

- **U/I** - Input signal type selector
  - *U position;* voltage input is selected
  - *I position;* current input is selected

DIP switches

- **SW 1**: Not used
- **SW 2**: Input signal range selector
  - *OFF position;* the input signal is in the range from 0-10 V (voltage input) or from 0-20 mA (current input)
  - *ON position;* the input signal is in the range from 2-10 V (voltage input) or from 4-20 mA (current input)
- **SW 3**: Direct or inverse acting selector
  - *OFF position;* the actuator is in direct acting mode (stem extracts as voltage increases)
  - ON position; the actuator is in inverse acting mode (stem retracts as voltage increases)
- **SW 4**: Fast/Slow - Speed selector
  - *OFF position;* the actuating speed is 7,5 s/mm
  - *ON position;* the actuating speed is 15 s/mm
- **SW 5**: Not used
- **SW 6**: Not used

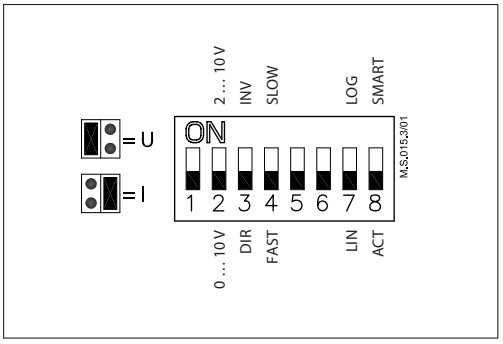

- **SW 7**: Linear or equal-percentage flow through valve selector
  - *OFF position;* the valve position is linear acc. to the control signal
  - *ON position;* the valve position is equal-percentage acc. to the control signal. This relation is adjustable - *see Equal-percentage valve-flow adjustment section*
- **SW 8**: Smart function selector
  - *OFF position;* the actuator does not try to detect oscillations in the system
  - *ON position;* actuator enables special anti oscillations algorithm – *see Anti oscillations algorithm section*

Equal-percentage valve-flow adjustment

(*SW 7 in position ON*)

The actuator has a special valve-flow adjustment feature. Flow can be, by turning the potentiometer clock wise (CW) or counter clockwise (CCW), variably adjusted from linear to logarithmic or opposite. For details see Instructions.

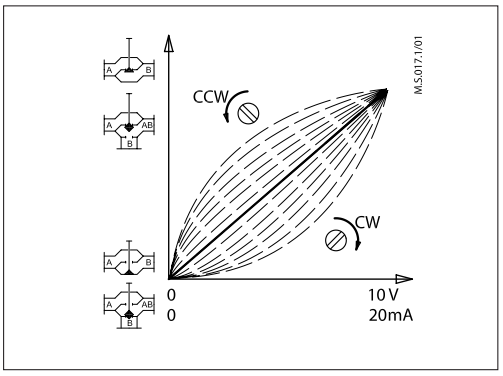

Jumper/DIP switch setting
(continued)

Anti oscillations algorithm
(SW 8 in position ON)

The actuator has special anti oscillations algorithm. In case control signal Y on certain point oscillates (Fig. 1) - looking from time perspective, algorithm starts to lower the amplification of the ouput to the valve. Instead of having static characteristics actuator changes to dynamic characteristics (Fig. 2) - certain output stroke area changes to new slope (decrease amplification).

After control signal does not oscillate anymore output to the valve slowly returns back to static characteristics.

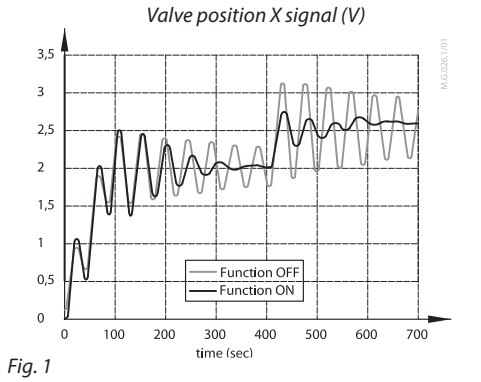

Fig. 1

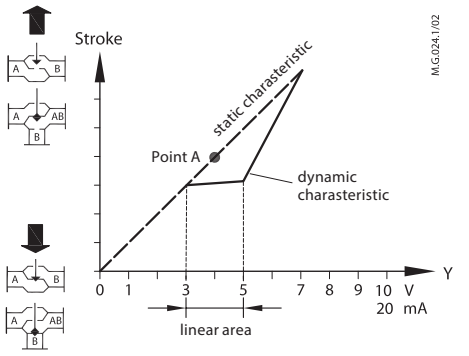

Fig. 2

iMCV 2nd generation

Harmonic oscillations are high frequency oscillations with low amplitude that vary around its own equilibrium value and not around set-point temperature. They can appear in up to 70 % of control time, even though the system is properly commissioned. Harmonic oscillations have negative influence on control stability, and lifetime of the valve and actuator.

Smoothening function

Smoothening function implemented in New 2nd generation of anti-oscillation function reduces harmonic oscillations; consequently room temperature is closer to the set-point (desired) temperature. Smoother operation of the MCV increases lifetime of the valve and actuator and saves energy and reduces costs in general.

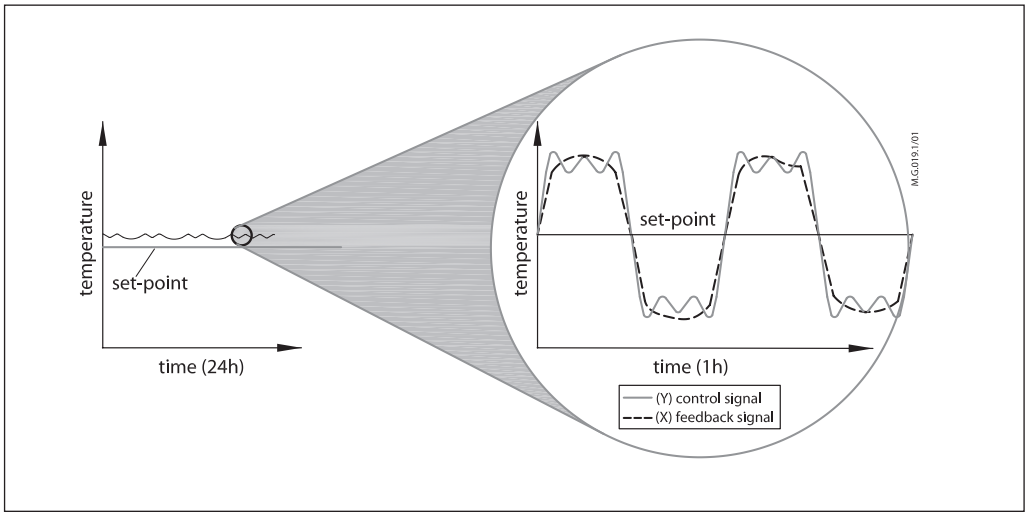

Commissioning

Complete the mechanical and electrical installation, set jumper and DIP-switches, then perform the necessary checks and tests:

- Apply power
  Note that the actuator will now perform automatic self stroking function

- Apply the appropriate control signal and check:
  - if the valve stem direction is correct for the application and
  - the actuator drives the valve over the entire stroke length

The unit is now fully commissioned.

Automatic self stroking feature
The actuator automatically adapts its stroke to the valve end positions:
- when power is applied for the first time or
- afterwards by pressing the STAND-BY/RESET button for 5 seconds

Testing entire valve stroke length
The actuator can be driven to the fully-open or closed positions (depending on valve type) by connecting SN to terminals 1 or 3.

Led signalling/ Actuator operating modes

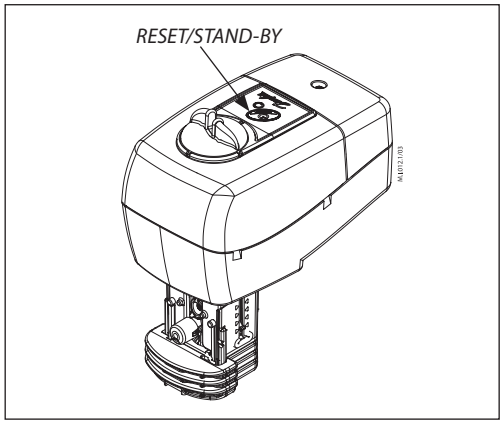

Flashing green LED: Self stroking mode (period is every second)	1s
Constant green LED: POSITIONING MODE	
Flashing green LED: NORMAL MODE (period is every 6 seconds)	6s
Flashing red LED: STAND-BY MODE (period is every two seconds)	2s

LED function indicator

The bi-colour (green/red) LED function indicator is located on the actuator cover. It indicates the operating modes.

External button

Actuator has external STAND-BY/RESET-button which is located next to LED indicator. By pressing on this button in different ways different operating modes are initiated:

- **Self stroking mode**
  Pressing the STAND-BY/RESET-button for 5 sec. causes the actuator to start *self stroking procedure*:
  The bi-colour LED flashes green at 1 sec. intervals during calibration procedure, which begins by extracting the stem. When the maximum force is detected (at the end valve position), the actuator then retracts the stem, until the maximum force is once again detected (on the other valve end position). The actuator will then enter to normal mode and respond to the control signal.

- **POSITIONING MODE**
  The bi-colour LED is green and stays on during positioning of the actuator according to the control signal

- **NORMAL MODE**
  When the positioning of the actuator is finished the LED flashes green every 6 seconds.

- **STAND BY MODE**
  Pressing the STAND-BY/RESET-button switches the actuator to STAND-BY MODE. The actuator keeps its last position in this mode and does not react to any control signal. This mode can be used for manual operation during the commissioning of other equipment, or for service purposes.
  The bi-colour LED flashes red at 2 sec. intervals. After pressing the STAND-BY/RESET-button again actuator switches to normal mode.

Manual override

Manual override is done by means of control knob on actuator housing:

- Disconnect power supply or press STAND-BY/ RESET button
- Adjust valve position using the control knob (observe the rotation direction)

After manual override is not needed:
- Restore power supply or press STAND-BY/ RESET button again

Remark:
When the manual override has been used, the output signal (X) is not correct until the actuator reaches its end position.

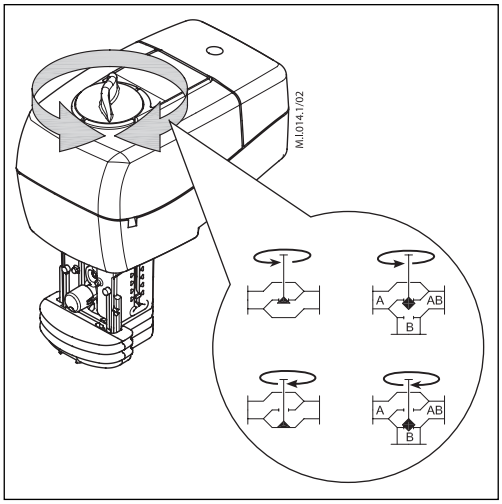

Wiring

24 V AC/DC only

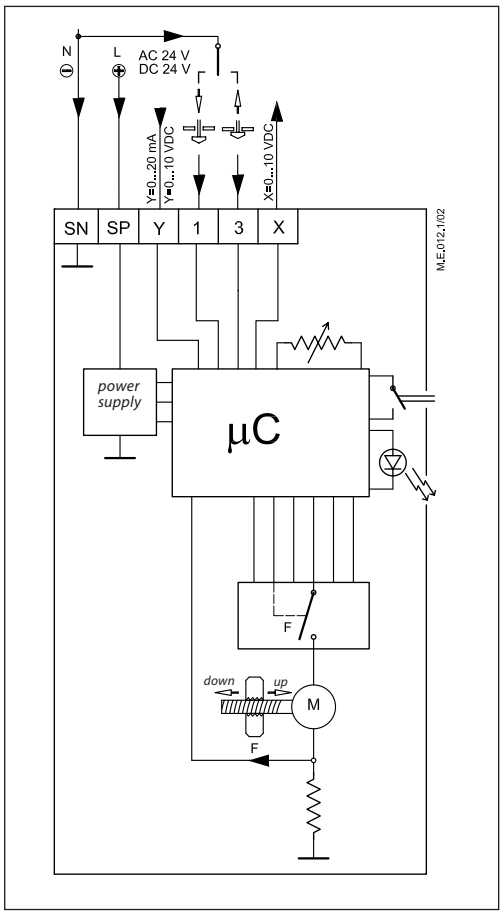

SP 24 V AC/DC ..... Power supply

SN 0 V ..... Common

Y 0(2)-10 V..... Input signal
0(4)-20 mA

X 0(2)-10 V..... Output signal

1, 3 Override input signal
(can not be used for 3-point control)

Wiring length	Recommended cross-sectional area of the wiring
0-50 m	0,75 mm²
> 50 m	1,5 mm²

Disposal

The actuator must be dismantled and the elements sorted into various material groups before disposal.

Dimensions

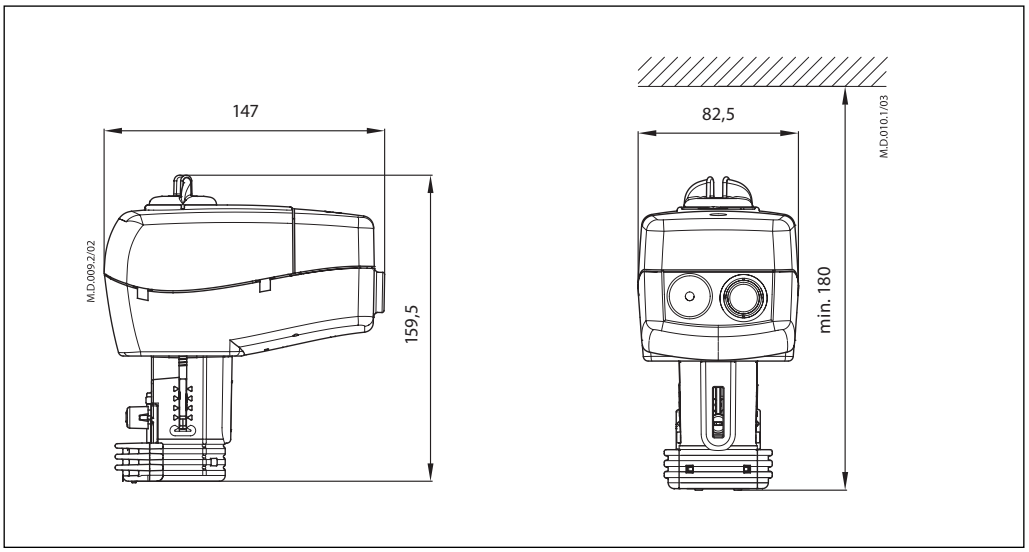

Actuator - valve combinations

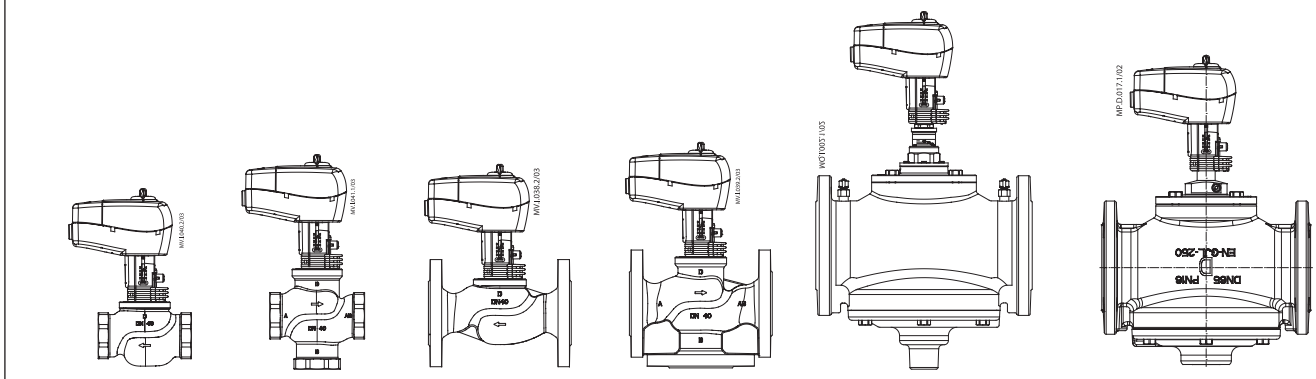

AME 435 + VRB 2, VRG 2 | *AME 435 + VRB 3, VRG 3* | *AME 435 + VF 2, VL 2* | *AME 435 + VF 3, VL 3* | *AME 435 + AB-QM (DN 40-100)* | *AME 435 + AHQM (DN 40-100)*

Danfoss can accept no responsibility for possible errors in catalogues, brochures and other printed material. Danfoss reserves the right to alter its products without notice. This also applies to products already on order provided that such alterations can be made without subsequential changes being necessary in specifications already agreed.
All trademarks in this material are property of the respective companies. Danfoss and the Danfoss logotype are trademarks of Danfoss A/S. All rights reserved.