2-way, Characterized Control Valve, Stainless Steel Ball and Stem

5-year warranty

Type overview

Type	DN
B249	50

Technical data

Functional data	Valve size [mm]	2" [50]
	Fluid	chilled or hot water, up to 60% glycol
	Fluid Temp Range (water)	0...250°F [-18...120°C]
	Body Pressure Rating	400 psi
	Close-off pressure Δps	200 psi
	Flow characteristic	equal percentage
	Leakage rate	0% for A – AB
	Pipe connection	Internal thread NPT (female)
	Servicing	maintenance-free
	Flow Pattern	2-way
	Controllable flow range	75°
	Cv	46
Materials	Valve body	Nickel-plated brass body
	Stem	stainless steel
	Stem seal	EPDM (lubricated)
	Seat	PTFE
	Characterized disc	TEFZEL®
	O-ring	EPDM (lubricated)
	Ball	stainless steel
Suitable actuators	Non Fail-Safe	ARB(X) ARQB(X) ARB(X) N4
	Spring	AFRB(X)

Safety notes

- WARNING: This product can expose you to lead which is known to the State of California to cause cancer and reproductive harm. For more information go to www.p65warnings.ca.gov

Product features

Application

This valve is typically used in air handling units on heating or cooling coils, and fan coil unit heating or cooling coils. Some other common applications include Unit Ventilators, VAV box re-heat coils and bypass loops. This valve is suitable for use in a hydronic system with variable flow.

Flow/Mounting details

Two-way valves should be installed with the disc upstream.

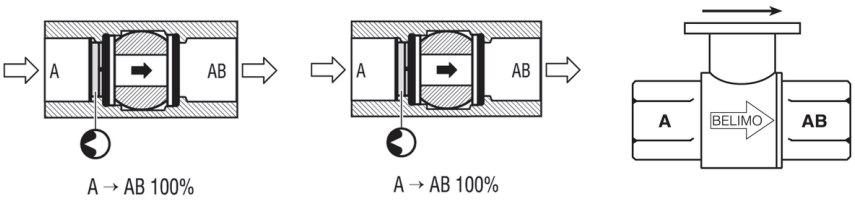

Dimensions

Type	DN	Weight
B249	50	2.8 lb [1.3 kg]

ARB, ARX

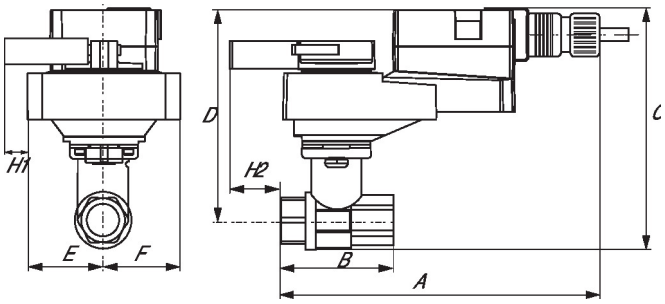

A	B	C	D	E	F	H1	H2
11.0" [280]	4.2" [107]	6.9" [175]	5.5" [140]	1.7" [44]	1.7" [44]	1.2" [30]	0.6" [15]

ARB N4, ARX N4, NRB N4, NRX N4

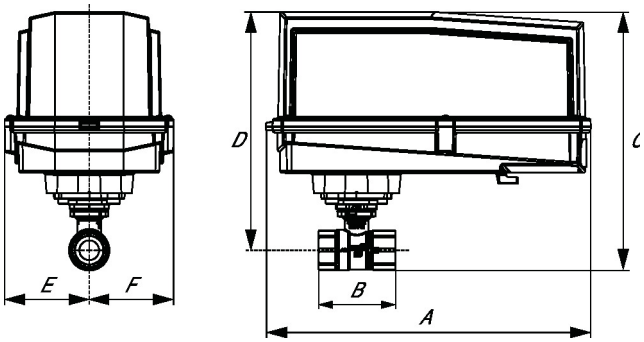

A	B	C	D	E	F
11.4" [289]	4.2" [107]	9.8" [249]	7.6" [194]	3.1" [80]	3.1" [80]

ARQB, ARQX

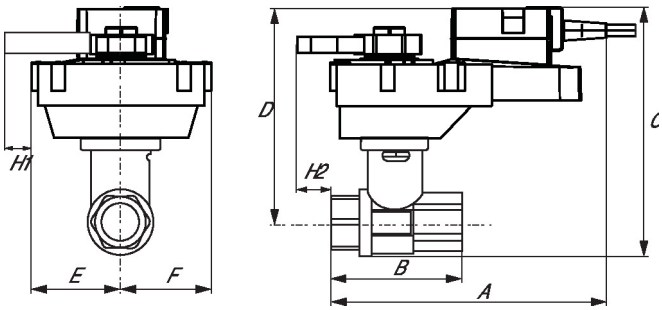

Dimensions

A	B	C	D	E	F	H1	H2
11.0" [280]	4.2" [107]	7.5" [191]	6.1" [155]	2.3" [58]	2.3" [58]	0.8" [20]	0.6" [15]

AFRB, AFRX

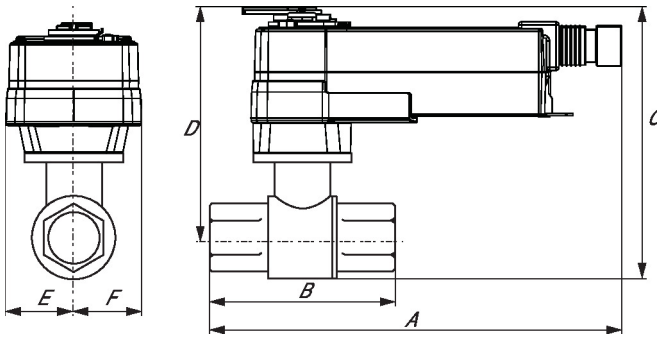

A	B	C	D	E	F
10.8" [275]	4.2" [107]	9.5" [241]	8.1" [206]	2.0" [51]	2.0" [51]

AFRB N4, AFRX N4

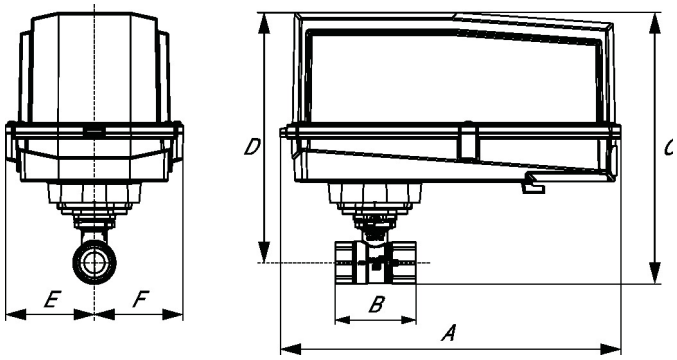

A	B	C	D	E	F
13.0" [330]	4.2" [107]	10.3" [262]	9.3" [235]	3.4" [86]	3.4" [86]

Modulating, Non fail-safe, 100...240 V

5-year warranty

Technical data

Electrical data	Nominal voltage	AC 100...240 V
	Nominal voltage frequency	50/60 Hz
	Nominal voltage range	AC 85...265 V
	Power consumption in operation	4 W
	Power consumption in rest position	1 W
	Transformer sizing	7.5 VA
	Electrical Connection	18 GA appliance cable, 1 m, 3 m or 5 m, with 1/2" NPT conduit connector, degree of protection NEMA 2 / IP54
	Overload Protection	electronic thoughout 0...90° rotation
Functional data	Operating range Y	2...10 V
	Operating range Y note	4...20 mA w/ ZG-R01 (500 Ω, 1/4 W resistor)
	Input impedance	100 kΩ for 2...10 V (0.1 mA), 500 Ω for 4...20 mA
	Position feedback U	2...10 V
	Position feedback U note	Max. 1 mA
	Direction of motion motor	selectable with switch 0/1
	Manual override	external push button
	Angle of rotation	90°
	Angle of rotation note	adjustable with mechanical stop
	Running Time (Motor)	90 s / 90°
	Running time motor variable	90 or 150 s
	Noise level, motor	45 dB(A)
	Position indication	Mechanical, pluggable
Safety data	Power source UL	Class 2 Supply
	Degree of protection IEC/EN	IP54
	Degree of protection NEMA/UL	NEMA 2
	Enclosure	UL Enclosure Type 2
	Agency Listing	cULus acc. to UL60730-1A/-2-14, CAN/CSA E60730-1:02 CE acc. to 2014/30/EU and 2014/35/EU
	Quality Standard	ISO 9001
	UL 2043 Compliant	Suitable for use in air plenums per Section 300.22(C) of the NEC and Section 602 of the IMC
	Ambient humidity	Max. 95% RH, non-condensing
	Ambient temperature	-22...122°F [-30...50°C]
	Storage temperature	-40...176°F [-40...80°C]
	Servicing	maintenance-free
Weight	Weight	2.3 lb [1 kg]

Materials	Housing material	Galvanized steel and plastic housing

Footnotes †Rated Impulse Voltage 4kV, Type of action 1, Control Pollution Degree 3.

Electrical installation

INSTALLATION NOTES

(A) Actuators with appliance cables are numbered.

(1) Provide overload protection and disconnect as required.

(2) Actuators may be connected in parallel. Power consumption and input impedance must be observed.

(5) Only connect common to negative (-) leg of control circuits.

(7) A 500 Ω resistor (ZG-R01) converts the 4...20 mA control signal to 2...10 V.

◆ Meets cULus requirements without the need of an electrical ground connection.

(!) **Warning! Live electrical components!**
During installation, testing, servicing and troubleshooting of this product, it may be necessary to work with live electrical components. Have a qualified licensed electrician or other individual who has been properly trained in handling live electrical components perform these tasks. Failure to follow all electrical safety precautions when exposed to live electrical components could result in death or serious injury.

Wiring diagrams

2...10 V / 4...20 mA Control AC 100...240 V

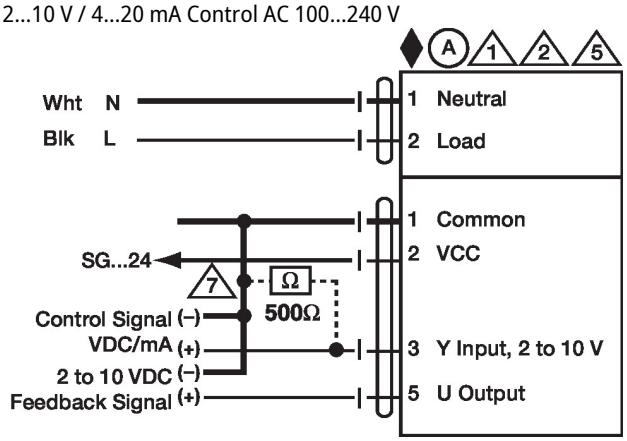

GENERAFRIO
LIDERES EN SISTEMAS DE AIRE ACONDICIONADO Y REFRIGERACION