GENERAFRIO
LIDERES EN SISTEMAS DE AIRE ACONDICIONADO Y REFRIGERACION

ENGINEERING
TOMORROW

Danfoss

Data sheet

ON/OFF zone valves AMZ 112, AMZ 113

Description

The ON/OFF zone valves type AMZ 112 and AMZ 113 are typical used in connection with:

- Domestic and commercial central heating applications
- Domestic hot water applications
- Solar energy plants
- Priority control of hot water supply and heating (diverting function)
- Priority control of boiler and solid fuel installations (diverting function).

The ON/OFF zone valves can be applied together with most Danfoss Room Thermostats, particulary type RET 230 (single poled switch) and programmable Room Thermostats type RET 1000/2000. Other compatible room thermostats are available, please see www.danfoss.com/heating for details.

Features:

- Indication of actual valve position;
- LED indication of turning direction;
- Manual valve turning mode enabled by a permanent clutch;
- No damage in case of valve blocking;
- Silent and reliable operation;
- Maintenance free;
- Integrated AUXILIARY switch;
- LED indication of activated AUXILIARY switch.

Main Data:

- Nominal voltage:
  - 230 V AC, 50/60 Hz
  - 24 V AC, 50/60 Hz
- Rotation angle 90°
- Actuator running speed
  - AMZ 112
  - DN 15-20: 30 sec / 90°
  - DN 25-50: 60 sec / 90°
  - AMZ 113
  - DN 15: 30 sec / 90°
  - DN 20-32: 60 sec / 90°
- Control signal: 2-point

Ordering

AMZ 112 2-port valve/actuator

DN	k_{vs} (m³/h)	Connection	Code No.	
			230 V	24 V
20	28	Cu-Cu 22	-	**082G5427**
15	17	R_p ½	**082G5406**	**082G5400**
20	28	R_p ¾	**082G5407**	**082G5401**
25	39	R_p 1	**082G5408**	**082G5402**
32	84	R_p 1¼	**082G5409**	**082G5403**
40	156	R_p 1½	**082G5410**	**082G5404**
50	243	R_p 2	**082G5411**	**082G5405**

AMZ 113 3-port valve/actuator

DN	k_{vs} (m³/h)	Connection	Code No.	
			230 V	24 V
15	4,3	R_p ½	**082G5418**	**082G5412**
20	8,3	R_p ¾	**082G5419**	**082G5413**
25	13	R_p 1	**082G5420**	**082G5414**
32	21	R_p 1¼	**082G5421**	**082G5415**

Technical data

Actuator

Power supply		V	24 AC or 230 AC
Power consumption		VA	AMZ 112: 2,5
			AMZ 113: 3,5
Frequency		Hz	50/60
Running speed [1]		sec/90°	30, 60
Control input			2-point
Operating torque		Nm	5, 10, 15
Rotation angle			90 °
Auxiliary switch			adjustable 0-90°
Auxiliary switch max. load		A	6 (24V AC, 230V AC)
Max. medium temperature		°C	110
Ambient temperature			0 … 50
Storage and transport temperature			–10 … 80
Protection Class			II according to EN 60730-1
Grade of enclosure			IP42 according to EN 60529
Weight	AMZ 112	g	728
	AMZ 113		906
Color / material			dark grey/PC
CE- marking in accordance with standards			Low Voltage Directive 2006/95/EC EMC-Directive 2004/108/EC RoHS II: 2011/65/EU Applied standards: EN 60730-1, EN 60730-2-14

[1] *5 Nm is 30 sec/90°; 10, 15 Nm is 60 sec/90°*

Valve AMZ 112

DN		**15**	**20**	**25**	**32**	**40**	**50**
Nominal pressure	PN	40				25	
Flow (k_{VS})	m³/h	17	28	39	84	156	243
Medium temperature	°C	2 … 130 (Actuator max. 110)					
Medium		Drinking water, water, glycol ≤50%, air, nonaggressive fluids					
Max. operating Δp	bar	6					
Valve neck		ISO 5211					
Connection		Internal thread Rp ISO 7/1					
Certifications and standards		CE-PED – CSA - GOST					
Materials							
Body		CW 617 N UNI EN 12165					
Ball, Stem		CW 614 N UNI EN 12164					
Antifriction ring		PTFE					

Valve AMZ 113

DN		**15**	**20**	**25**	**32**
Nominal pressure	PN	40			
Flow (k_{VS})	m³/h	4,3	8,3	13	21
Medium temperature	°C	2 … 130 (Actuator max. 110)			
Medium		Drinking water, water, glycol ≤50%, air, nonaggressive fluids			
Max. operating Δp	bar	6			
Valve neck		ISO 5211			
Connection		Internal thread Rp ISO 7/1			
Certifications and standards		CE-PED – CSA - GOST			
Materials					
Body		CW 617 N UNI EN 12165			
Ball, Stem		CW 614 N UNI EN 12164			
Antifriction ring		PTFE			

Application principles

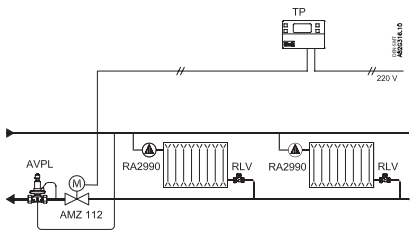

ON/OFF control of Radiator -, under floor heating and zone systems (night set back).

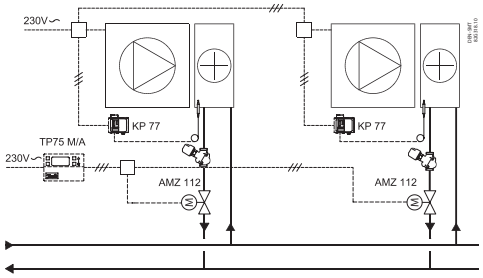

ON/OFF control of one or more heating/ surfaces.

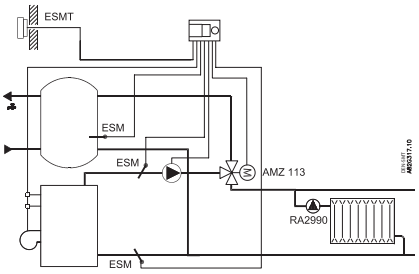

Priority control of hot water supply and heating - diverting function.

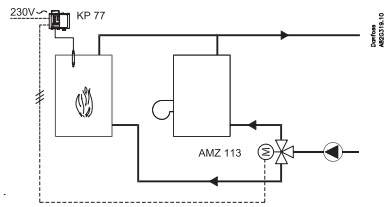

Priority control of boiler and solid fuel installations - diverting function.

Installation positions

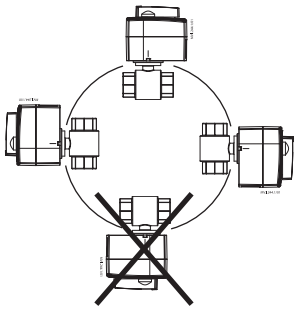

Hydraulic installation

Recommended installation of the eletric actuated ball valve

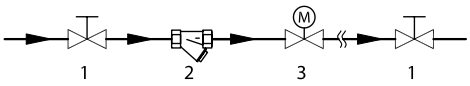

1. Ball valve
2. Strainer
3. AMZ

Manual override

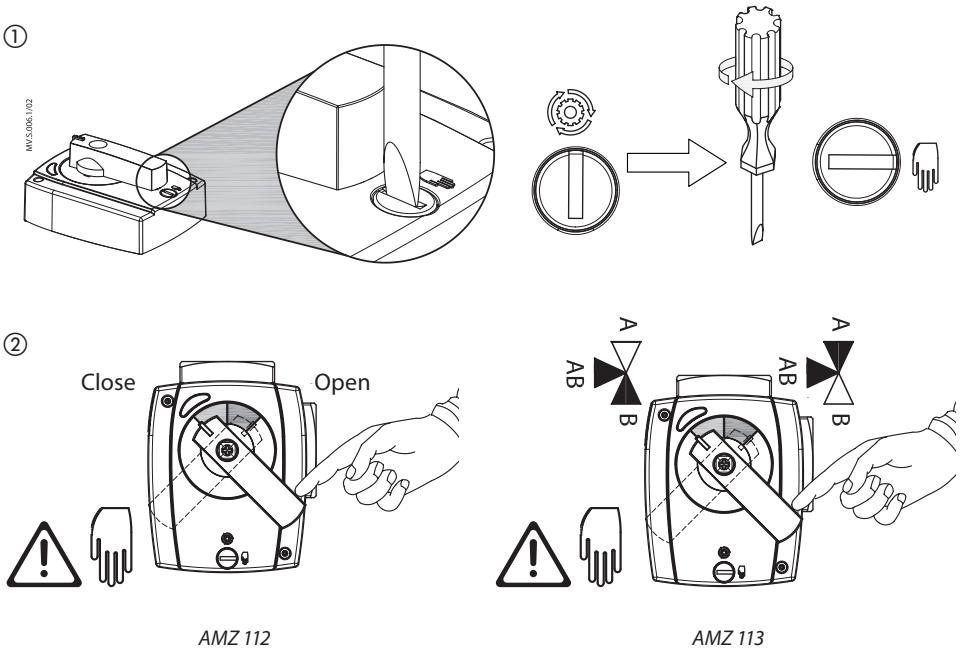

LED signalling

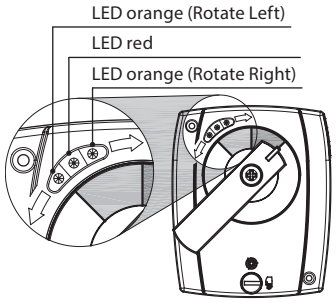

AMZ 112/113

LED color	2-point
orange	Rotation Left / Right
red	AUX switch activation

Wiring

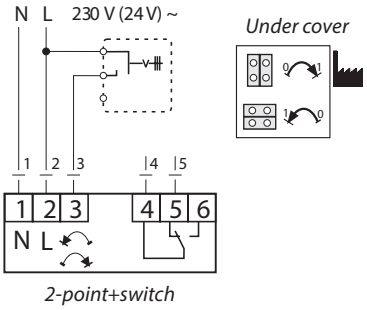

Direct/Inverse function

Jumper	Wiring	Open Port
DIR	L = 2	AB-B
	L = 2 & 3	AB-A
INV	L = 2	AB-A
	L = 2 & 3	AB-B

Dimensions

AMZ 112 - Copper connection

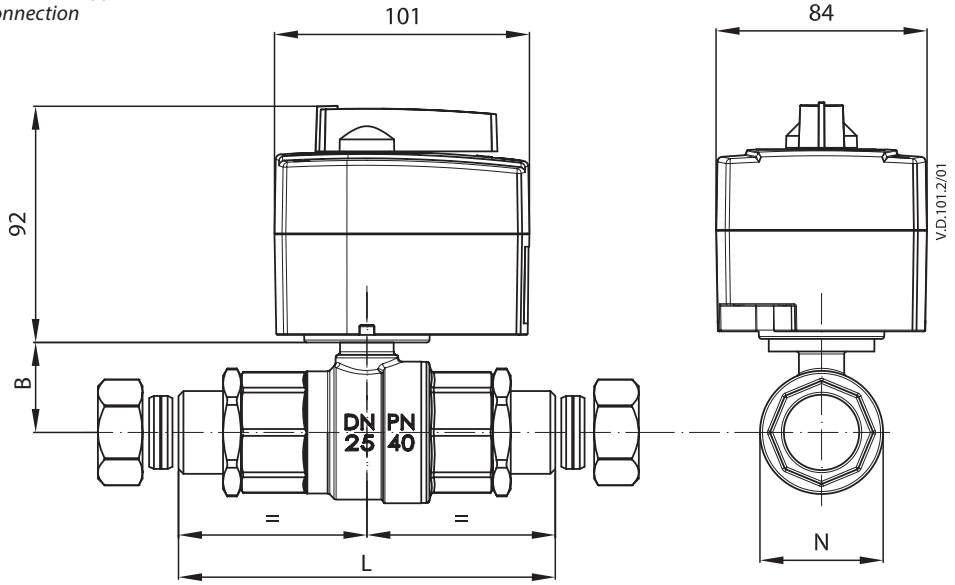

AMZ 112

DN	Connection	L	B	N
	G	mm		
20	Cu-Cu 22	111,5	33	37

AMZ 112

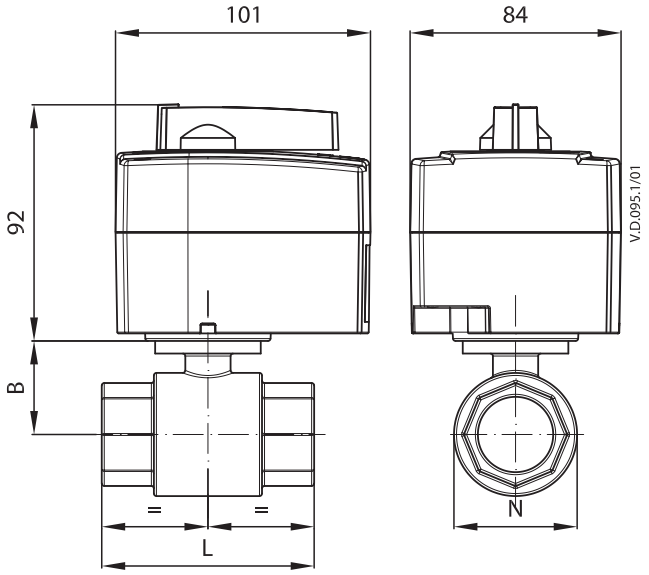

DN	Connection	L	B	N
	G	mm		
15	½″	61	29,4	37
20	¾″	69,5	33	37
25	1″	84,5	37,2	42
32	1¼″	98,5	47,5	42
40	1½″	110	53	42
50	2″	130	64	48

Dimensions (*continuous)*

AMZ 113

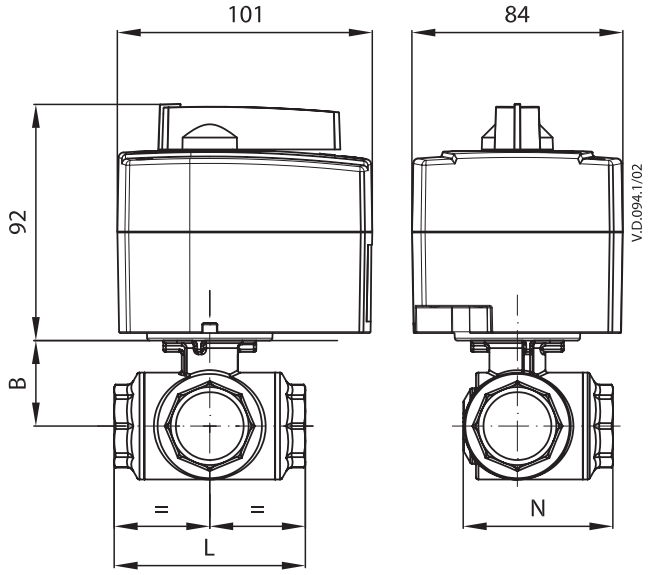

DN	Connection	L	B	N
	G	mm		
15	½″	64,5	38	49,5
20	¾″	78	42	59,5
25	1″	97	46,5	74,5
32	1¼″	118	61,25	95,5