GENERAFRIO

DAIKIN

DVPVC

Multi-Position, Variable-Speed Air Handler

- *Comfortnet™-Compatible*
- *ECM-based*
- *Inverter-tuned*
- *Internal TXV*

Contents

Air Handler Nomenclature 2
Heater Kit Nomenclature 2
Product Specifications 3
Dimensions 4
Airflow Data 5
Heat Kit Data 7
Wiring Diagram 9
Accessories 11

Product Features

- Internal factory-installed, inverter-tuned thermal expansion valve for cooling and heat pump applications
- Variable-speed ECM blower motor
- ComfortNet™ Communicating System compatible
- Auto configuration of the airflow and tonnage in communicating mode
- Provides constant CFM over a wide range of static pressure conditions independent of duct system
- CFM indicator
- Fault recall of six most recent faults
- Provides adjustable low CFM for efficient fan-only operation
- Improved humidity and comfort control
- Built-in compatibility with multi-stage heat pump and cooling applications
- All-aluminum evaporator coil
- AHRI certified; ETL listed
- Cabinet air leakage less than 2.0% at 1.0 inch H2O when tested in accordance with ASHRAE standard 193
- Cabinet air leakage less than 1.4% at 0.5 inch H2O when tested in accordance with ASHRAE standard 193
- 3 kW – 25 kW electric heater kits
- Horizontal or vertical configuration capabilities
- 21” depth for easier attic access
- DecaBDE-free thermoplastic drain pan with secondary drain connections
- Screw-less sides and back helps to reduce condensation when installed in humid locations
- Foil-faced insulation covers the internal casing to reduce cabinet condensation
- Galvanized, leather grain-embossed finish
- Glue-less cabinet insulation retention
- Tool-less filter access

12 YEAR PARTS LIMITED WARRANTY* ComfortNet CONTROL SYSTEM ALL ALUMINUM COIL C ETL LISTED US Intertek AHRI CERTIFIED ISO 9001 ISO 14001

* Complete warranty details available from your local dealer or at www.daikincomfort.com. To receive the 6-Year Unit Replacement Limited Warranty and 12-Year Parts Limited Warranty, online registration must be completed within 60 days of installation. Additional requirements for annual maintenance are required for the Unit Replacement Limited Warranty. Online registration and some of the additional requirements are not required in California or Quebec.

D	V	24	P	V	C	B	1	4	AA
1	2	3,4	5	6	7	8	9	10	11,12

Brand
D - Daikin Single-Piece Air Handler

Unit Application
V - Multi-Position Variable-Speed Motor

Nominal Capacity Range
25 - 2 Tons 59 - 4 Tons
37 - 3 Tons 61 - 5 Tons

Cabinet Finish
P - Painted

Expansion Device
E - Electronic Expansion Valve
T - Expansion Valve
V - Inverter-Tuned Expansion Valve

Communications
C - ComfortNet™ Compatible

Cabinet Width
B = 17½" C = 21"
D = 24½"

Electrical
1 - 208/240 V, 1 Phase, 60 Hz

Refrigerant Compatability
4 = R-410A

Engineering *
Major/ Minor Revisions
*Not used for inventory management

HKS	X	03	X	A	AA
1	2	3	4	5	6,7

Unit Type
HKS Heat Kit for Air Handlers

Phase
X No circuit breaker
C Circuit Breaker

Heating Capacity @ 240 Volts

03	3.0 kW	15	14.4 kW
05	4.5 kW	19	19.2 k@ wth 150F limit
06	6.0 kW	20	19.2 kW with 170F limit
08	8.0 kW	25	25.0 kW
10	9.6 kW		

Phase
A Single Phase 208 V
B Single Phase 240 V
C Single Phase 208/240 V
D Three Phase 208 V
E Three Phase 240 V
F Three Phase 208/240 V
G Three Phase 460 V

Cabinet Size (MAX)
C C Cabinet
D D Cabinet
X All Cabinet Sizes

Revisions
Engineering Revisions

	DV24PVC C14A*	DV36PVC D14A*	DV48PVC D14A*	DV60PVC D14A*
Nominal Ratings				
Cooling (BTU/h)	24,000	36,000	48,000	60,000
Blower				
Diameter	10⅝"	10⅝"	10⅝"	11⅝"
Width	8”	10⅝"	10⅝"	10⅝"
Coil Connections				
Liquid	⅜"	⅜"	⅜"	⅜"
Suction	⅞"	⅞"	⅞"	⅞"
Coil Drain Connection (FPT)	¾"	¾”	¾”	¾”
Electrical Data				
Voltage	208/240	208/240	208/240	208/240
Min Circuit Ampacity	4.9/4.9	6.5/6.5	6.5/6.5	8.6/8.6
Max. Overcurrent Device (Amps)	15/15	15/15	15/15	15/15
Minimum VAC	197	197	197	197
Maximum VAC	253	253	253	253
Blower Motor				
Full Load Amps (FLA)	3.9	5.2	5.2	6.9
Horsepower (HP)	½	¾	¾	1
Ship Weight (Lbs.)	118	155	167	167

Note

- Minimum Circuit Ampacity (MCA) and Maximum Overcurrent Protection (MOP) for blower without supplemental heat installed. Refer to unit nameplate and/or Heat Kit Data for specification with approved accessory heaters installed.

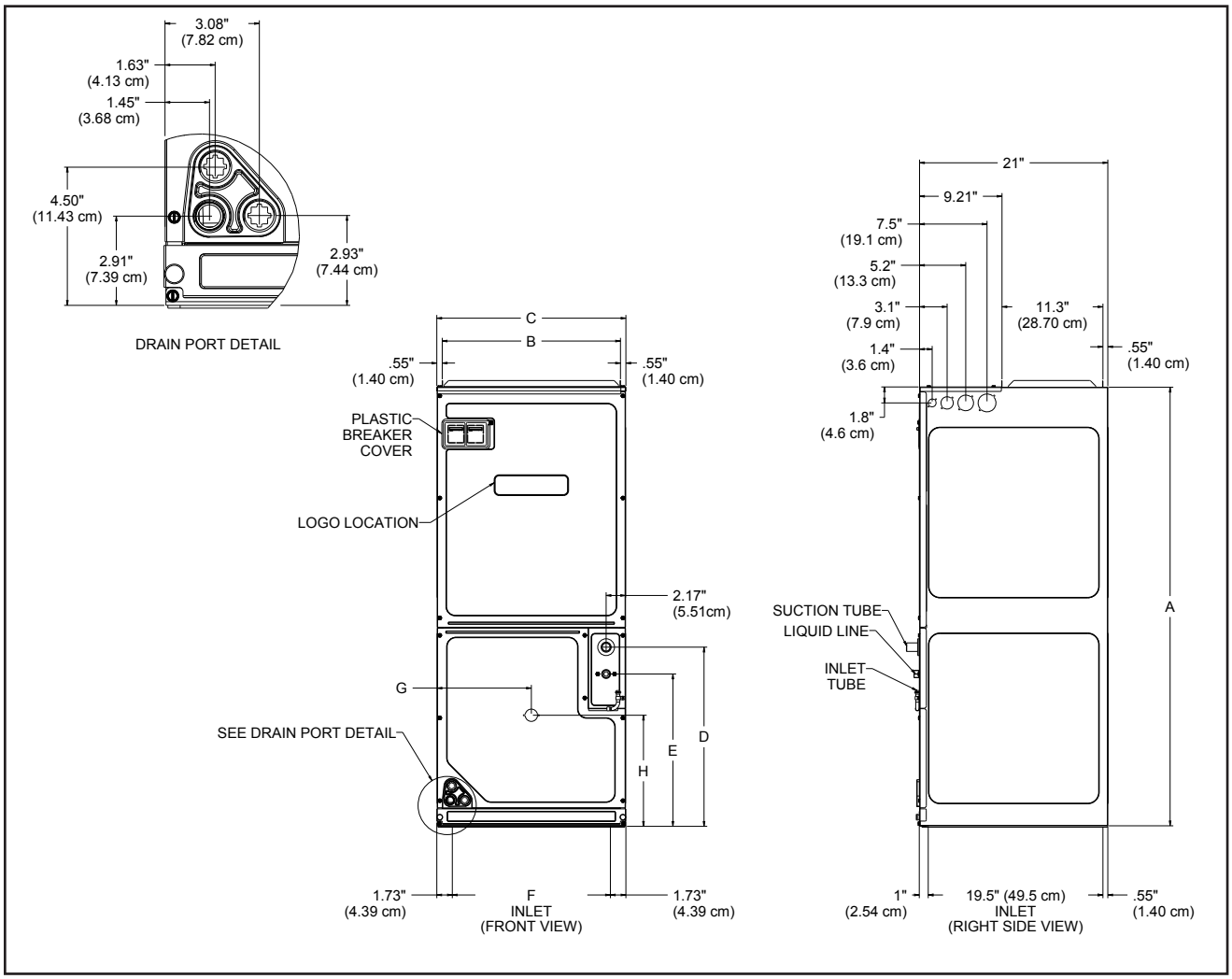

MODEL	A	B	C	D	E	F	G	H
DV24PVCC14	49	20	21	20	17	17¾	10½	12⅜
DV36PVCD14	58	23⅜	24½	28¾	25¾	21¼	12⅜	12⅜
DV48PVCD14	58	23⅜	24½	28¾	25¾	21¼	12⅜	12⅜
DV60PVCD14	58	23⅜	24½	28¾	25¾	21¼	12⅜	12⅜

Model	Rated Air flow CFM								
	0.1	0.2	0.3	0.4	0.5	0.6	0.7	0.8	0.9
DV24PVCC14A*	700	690	690	685	680	670	665	660	655
DV36PVCD14A*	1190	1170	1165	1160	1145	1130	1120	1105	1100
DV48PVCD14A*	1445	1440	1430	1415	1405	1390	1380	1375	1370
DV60PVCD14A*	1645	1640	1640	1635	1630	1625	1620	1620	1615

Model	Maximum Air flow CFM								
	0.1	0.2	0.3	0.4	0.5	0.6	0.7	0.8	0.9
DV24PVCC14A*	770	760	760	755	750	735	730	725	720
DV36PVCD14A*	1310	1285	1280	1275	1260	1245	1230	1215	1210
DV48PVCD14A*	1590	1585	1575	1560	1545	1530	1520	1515	1505
DV60PVCD14A*	1810	1805	1805	1800	1790	1785	1780	1780	1775

Notes

- The chart is for information only. For satisfactory operation, external static pressure must not exceed value shown on rating plate.
- Use the CFM adjustment factors of .98 for horizontal left, .95 for horizontal right & .96 for downflow orientations.
- Airflow data indicated is at 230V without air filter in place.

Electric Heat Airflow

HTR kW	Dip Switch Settings			DV24PVC C14	DV36PVC D14†	DV48PVC D14††	DV60PVC D14†††
	9	10	11				
3	ON	ON	ON	730	850**	NR	NR
5	ON	ON	OFF	780	1250	1250	1250
6	ON	OFF	ON	850	1300	1300	1300
8	ON	OFF	OFF	950	1500	1500	1500
10	OFF	ON	ON	1025	1550	1550	1550
15	OFF	ON	OFF	NR	1720	1720	1780
20	OFF	OFF	ON	NR	1800	1815	1850
21 or 25*	OFF	OFF	OFF	OFF	NR	1850	1850

* Within thermostat user menu, CTK0* communicating thermostat will display 20kW for OFF- OFF- ON dipswitch selection, 21kW for OFF-OFF-OFF dipswitch selection.

† For match up with a 2 ton outdoor unit: Heater kit application shall not exceed 10 kW. Airflow for 5 kW up to 10 kw heater kits shall be set to 850 cfm speed tap of ON-ON-ON.

†† For match up with a 3 ton outdoor unit: Heater kit application shall not exceed 15 kW. Airflow for 5 kW up to 15 kw heater kits shall be set to 1300 cfm speed tap of ON-OFF-ON.

††† For match up with a 3.5 ton outdoor unit: Heater kit application shall not exceed 20 kW. Airflow for 5 kW up to 20 kw heater kits shall be set to 1500 cfm speed tap of ON-OFF-OFF.

** 3 kW heater kit is not applicable for this indoor application.

NR - Not rated

Notes

- Airflow data shown applies to the electric heat only in either legacy mode or communicating mode operation
- Within thermostat user menu CTK04 communicating thermostat will display 20KW for OFF- OFF- ON dip switch selection, 21kW for OFF-OFF-OFF dip switch selection.

Models	Circuit 1			Circuit 2			Single-Point Kit	
	Amps	MCA[1]	MOP[2]	Amps	MCA[1]	MOP[2]	MCA[1]	MOP[2]
DV24PVCC14AA	0.0/0.0	4.9/4.9	15/15	---	---	---	---	---
HKS*03XC*	10.8/12.5	18/21	20/25	---	---	---	---	---
HKS*05XC*	17.3/20.0	27/30	30/30	---	---	---	---	---
HKS*06XC*	21.7/25.0	32/36	35/40	---	---	---	---	---
HKS*08XC*	28.9/33.3	41/47	45/50	---	---	---	---	---
HKS*10XC*	34.7/40.0	48/55	50/60	---	---	---	---	---
DV36PVCD14AB	0.0/0.0	6.5/6.5	15/15	---	---	---	---	---
HKS*03XC*	10.8/12.5	20/22	20/25	---	---	---	---	---
HKS*05XC*	17.3/20.0	28/32	30/35	---	---	---	---	---
HKS*06XC*	21.7/25.0	34/38	35/40	---	---	---	---	---
HKS*08XC*	28.9/33.3	43/48	45/50	---	---	---	---	---
HKS*10XC*	34.7/40.0	50/57	50/60	---	---	---	---	---
HKSC15*#*	34.7/40.0	50/57	50/60	17.3/20.0	22/25	25/25	72/82	80/90
HKSC20D#*	34.7/40.0	50/57	50/60	34.7/40	43/50	45/50	93/107	100/110
HKSC15XF*	0.0/0.0	6.5/6.5	15/15	30.0/34.6	38/43	40/45	---	---
HKSC20XF*	0.0/0.0	6.5/6.5	15/15	37.5/43.3	47/54	50/60	---	---
DV48PVCD14AB	0.0/0.0	6.5/6.5	15/15	---	---	---	---	---
HKS*03XC*	10.8/12.5	20/22	20/25	---	---	---	---	---
HKS*05XC*	17.3/20.0	28/32	30/35	---	---	---	---	---
HKS*06XC*	21.7/25.0	34/38	35/40	---	---	---	---	---
HKS*08XC*	28.9/33.3	43/48	45/50	---	---	---	---	---
HKS*10XC*	34.7/40.0	50/57	50/60	---	---	---	---	---
HKSC15*#*	34.7/40.0	50/57	50/60	17.3/20.0	22/25	25/25	72/82	80/90
HKSC20D#*	34.7/40.0	50/57	50/60	34.7/40	43/50	45/50	93/107	100/110
HKSC15XF*	0.0/0.0	6.5/6.5	15/15	30.0/34.6	38/43	40/45	---	---
HKSC20XF*	0.0/0.0	6.5/6.5	15/15	37.5/43.3	47/54	50/60	---	---
HKSC25DC*	52.0/60.0	74/84	80/90	34.7/40.0	43/50	45/50	117/134	125/150
DV60PVCD14AC	0.0/0.0	8.6/8.6	15/15	---	---	---	---	---
HKS*03XC*	10.8/12.5	22/24	25/25	---	---	---	---	---
HKS*05XC*	17.3/20.0	30/34	35/35	---	---	---	---	---
HKS*06XC*	21.7/25.0	36/40	40/40	---	---	---	---	---
HKS*08XC*	28.9/33.3	45/50	45/60	---	---	---	---	---
HKS*10XC*	34.7/40.0	52/59	60/60	---	---	---	---	---
HKSC15*#*	34.7/40.0	52/59	60/60	17.3/20	22/25	25/25	74/84	80/90
HKSC20D#*	34.7/40.0	52/59	60/60	34.7/40.0	43/50	45/50	95/109	100/110
HKSC15XF*	0.0/0.0	8.6/8.6	15/15	30.0/34.6	38/43	40/45	---	---
HKSC20XF*	0.0/0.0	8.6/8.6	15/15	37.5/43.3	47/54	50/60	---	---
HKSC25DC*	52.0/60.0	74/84	80/90	35/40	43/50	45/50	117/134	125/150

[1] Minimum Circuit Ampacity (Heater Amps + Motor Amps) X 1.25
[2] Maximum Overcurrent Protection = 2.25 X Motor Amps + Heater Amps
^ Circuit 1: Single-phase for Air Handlers Circuit 2: Three-phase for HKR3 Heater Kits
* Revision level that may or may not be designated

C = Circuit Breaker Option
--- indicates Not Required
HKA meets the new UL1995 requirements for 15 and 20KW heaters

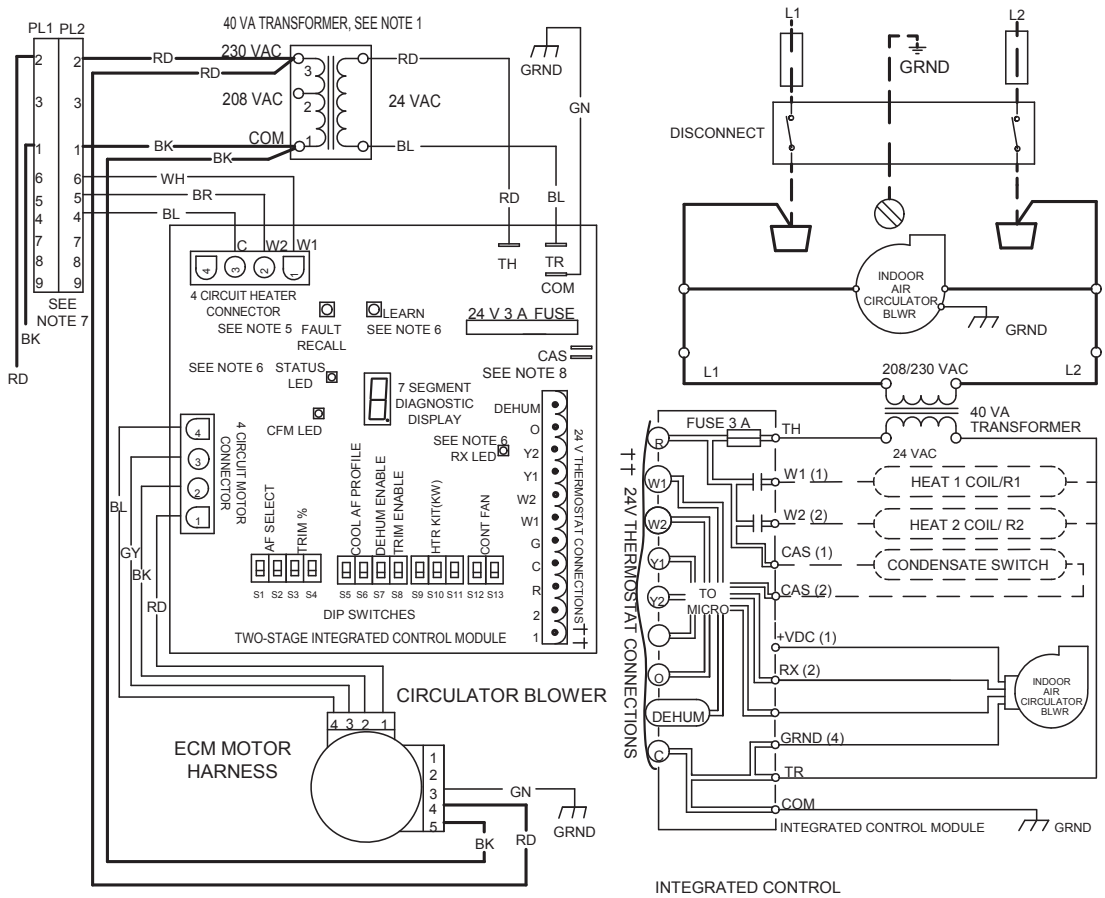

NOTES:

1. PLACE RED WIRES ON TRANSFORMER TERMINAL 2 FOR 208 VAC OPERATION.
2. MANUFACTURER'S SPECIFIED REPLACEMENT PARTS MUST BE USED WHEN SERVICING.
3. IF ANY OF THE ORIGINAL WIRES AS SUPPLIED WITH THIS UNIT MUST BE REPLACED, IT MUST BE REPLACED WITH WIRING MATERIAL HAVING A TEMPERATURE RATING OF AT LEAST 105°C. USE COPPER CONDUCTORS ONLY.
4. UNIT MUST BE PERMANENTLY GROUNDED AND CONFORM TO N.E.C AND LOCAL CODES.
5. TO RECALL THE LAST 6 FAULTS, MOST RECENT TO LEAST RECENT, DEPRESS SWITCH FOR MORE THAN 2 SECONDS WHILE IN STANDBY (NO THERMOSTAT INPUTS)
6. RED STATUS LED PROVIDES NETWORK STATUS. GREEN RX LED INDICATES NETWORK TRAFFIC. USE LEARN BUTTON TO RESET NETWORK.
7. DISCARD CONNECTOR PL1 WHEN INSTALLING OPTIONAL HEAT KIT.
8. THE CONDENSATE ALARM SWITCH (CAS) TERMINALS CAN ONLY BE UTILIZED WITH COMMUNICATING MODE SETUPS AND MUST BE ENABLED WITH A COMMUNICATING THERMOSTAT. THIS FEATURE IS NOT OPERATIONAL WITH LEGACY SYSTEMS.

†† USE N.E.C CLASS 2 WIRE.

INTEGRATED CONTROL

LOW VOLTAGE (24V)
LOW VOLTAGE FIELD
HI VOLTAGE (230V)
HI VOLTAGE FIELD
JUNCTION
TERMINAL
INTERNAL TO
EQUIPMENT GRND
FIELD GRND
FIELD SPLICE
RESISTOR
OVERCURRENT PROT. DEVICE
PLUG CONNECTION

COLOR CODES:
PK ---- PINK
BR ---- BROWN
WH ---- WHITE
BL ---- BLUE
GY ---- GRAY
RD ---- RED
YL ---- YELLOW
OR ---- ORANGE
PU ---- PURPLE
GN ---- GREEN
BK ---- BLACK

0140A00244-B

WARNING ***High Voltage:*** Disconnect all power before servicing or installing this unit. Multiple power sources may be present. Failure to do so may cause property damage, personal injury, or death.

Wiring is subject to change. Always refer to the wiring diagram on the unit for the most up-to-date wiring.

Our continuing commitment to quality products may mean a change in specifications without notice.
© 2015 DAIKIN NORTH AMERICA LLC • Houston, Texas • Printed in the USA.