GENERAFRIO

Fieldpiece

Job Link® System Power Clamp Meter

OPERATOR'S MANUAL

Model SC480

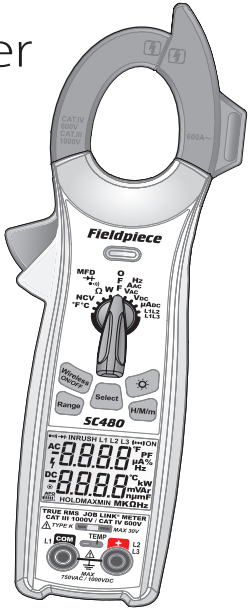

Safety Information

Understand and follow operating instructions carefully.

A **Warning** identifies conditions and procedures that are dangerous to the user. A **Caution** identifies conditions and procedures that can cause damage to the Product or the equipment under test.

⚠ WARNING

To avoid possible electric shock, personal injury or death, follow these guidelines:

- Use the meter only as specified in this manual; otherwise, the protection provided by the meter may be impaired.
- Do not use if meter appears damaged. Visually inspect the meter to ensure case is not cracked and back case is securely in place.
- Inspect and replace leads if insulation is damaged, metal is exposed, or probes are cracked. Pay particular attention to the insulation surrounding the connectors.
- Do not use meter if it operates abnormally as protection maybe impaired.
- Use only correct measurement category (CAT), voltage, and amperage rated probes, test leads, and adapters for the measurement.
- Do not use this meter to verify the presence of hazardous voltages on circuits that may have voltages generated from frequencies above 1000Hz as the low pass filter limits voltage measurements to below 1000Hz.

- Do not use during electrical storms or in wet weather.
- Do not use around explosive gas, dust, or vapor.
- Do not apply more than the rated voltage to, as marked on the meter, between terminals or between any terminal and earth ground.
- Do not use without the battery and the back case properly installed.
- Replace battery as soon as battery indicator appears to avoid false readings.
- Remove the test leads from the circuit prior to removing battery cover.
- Do not attempt to repair this unit as it has no user-serviceable parts.
- Temperature switch prevents leaving thermocouple plugged in while measuring voltage.
- Do not measure current while the test leads are in the input jacks.
- When measuring high frequency AC current, do not exceed the rated 600AAC of the clamp. Failure to adhere may cause the clamp to heat up dangerously.
- Do not use the HOLD function to measure unknown potentials. When HOLD is turned on, the display does not change when a different potential is measured.
- Do not use in CAT III or CAT IV environments without the protective cap of test probe. The protective cap decreases the exposed probe metal <4mm. This decreases the possibility of arc

flash from short circuits.

- Do not place magnet inside Category IV panel. Place it outside the panel instead.

⚠ CAUTION

To protect yourself, think "Safety First":

- Voltages exceeding 30VAC or 60VDC pose a shock hazard so use caution.
- Use appropriate personal protective equipment such as safety glasses, face shields, insulating gloves, insulating boots, and/or insulating mats.
- Disconnect circuit power and discharge all high-voltage capacitors before testing resistance, continuity, diodes, or capacitance.

Before each use:

- Perform a continuity test by touching the test leads together to verify the functionality of the battery and test leads.
- Use the 3 Point Safety Method. (1) Verify meter operation by measuring a known voltage. (2) Apply meter to circuit under test. (3) Return to the known live voltage again to ensure proper operation.
- Use the proper terminals, functions and range for your measurements.
- Never ground yourself when taking electrical measurements.
- Connect the black common lead to ground or neutral before applying the red test lead to potential voltage. Disconnect the red test lead from the voltage first.

- Always work with a partner.
- Keep fingers behind the finger guards on the probes.

All voltage tests: All voltage ranges will withstand up to 1000VDC/750VAC rms. Do not apply more than 1000VDC or 750VAC rms.

Symbols used:

- ⚡ Caution, risk of electric shock
- ⚠ Caution, refer to manual.
- ⏚ Ground
- ⧈ Double insulation

⚠ WARNINGS

DISCONNECT AND UNPLUG TEST LEADS before opening case.

TEST NCV FUNCTION ON KNOWN LIVE WIRE before using.

DO NOT APPLY VOLTAGE greater than 30VAC/VDC to the thermocouple or the jacks when the rotary dial is on °F°C. (Use only Type K thermocouples)

DO NOT APPLY VOLTAGE TO THE JACKS when the rotary dial is on microamps. Even low voltages can cause a current overload and potentially harm the meter.

Description

Your SC480 is the essential clamp meter with wireless functionality for the HVACR professional. Send your electrical measurements directly to the Job Link® System mobile app. Leave the meter behind a closed blower door and view the current measurement on your mobile device.

Help determine system efficiency by directly measuring power consumption (W) of the system. Use this value to inform your customer of energy saving measures you can take to help them save money on their energy bills.

The SC480 is great for troubleshooting mini-split systems. Reach those cramped mini-split connectors with the included RCT2 probe tips for voltage and resistance measurements. Plus, measure frequency (Hz) directly with clamp jaw.

Hang your SC480 clamp meter to any metallic surface with the heavy-duty magnet. See both voltage and amperage readings at the same time on the big dual display.

Verify the order of 3-phase voltage lines with just two leads. Capture L1L2 and L1L3 to check that motor lines are correctly installed with Phase Rotation test.

Take more accurate VAC and AAC readings on variable frequency drives with True RMS sensing technology. Measure the starting amp draw of a compressor with Inrush current mode.

Illuminate the way with a powerful LED built into the clamp jaw. Easily see your measurements with the bright blue backlight on the display.

Take measurements more safely with one hand using the single test lead holder. Test leads come with removable gold plated tips to reliably connect Fieldpiece accessory heads.

What's Included

- SC480 Job Link® System Clamp Meter
- ADLS2 Deluxe Test Leads Kit
- ASA2 Alligator Clips
- RCT2 Molex Probe Tips
- ATB1 Type K Thermocouple
- 1 Velcro Strap
- 9V Alkaline Battery (Not installed)
- ANC12 Protective Padded Case
- Operator's Manual

Quick Start

1. For electrical testing, connect test leads to black "COM" and red "+" jacks.
2. Rotate the dial to your desired measurement.
3. Connect to test points and read measurement.
4. For temperature testing, remove test leads, slide TEMP switch to the right and connect a Type K thermocouple.

Measurements Dial

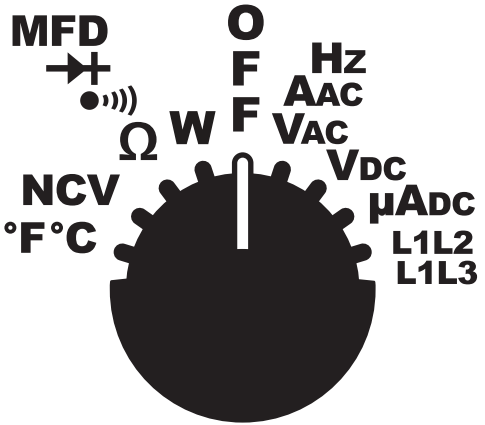

The SC480 is loaded with the measurement parameters essential for HVACR professionals. Select the parameter on the dial you want to measure with the rotating selector switch.

Buttons

Illuminate backlight.

Activate Inrush AAC capture mode.

Activate wireless to send measurements to Job Link® system mobile app.
Wait 3 seconds before switching positions to save setting.

Activate and cycle through Hold, Maximum, minimum, and real-time measurements. (Press for 1 second to clear and exit)

Deactivate autoranging and select the range manually.

Cycle through displayed values on applicable switch positions.
(Hold while switching on to toggle high voltage warning beeper.)

Display Icons

	Battery Life Monitor
APO	Auto Power Off Enabled
	High Voltage Warning (>30VAC/VDC)
	Manual Ranging
HOLD	Data Hold
MAX	Maximum
MIN	Minimum
INRUSH	Inrush AAC
ON	Wireless ON to Job Link® mobile app
W	Watts (Active Power)
PF	Power Factor
VAr	Reactive Power
VA	Apparent Power
°F	Fahrenheit
°C	Celsius
	Continuity Test
	Diode Test
Hz	Frequency (Hertz)
Ω	Resistance Test (Ohms)
F	Capacitance Test (farads)
µA	Microamps DC
n	Nano Unit (10^{-9}, one billionth)
µ	Micro Unit (10^{-6}, one millionth)
m	Milli Unit (10^{-3}, one thousandth)
K	Kilo Unit (10^{3}, one thousand)
M	Mega Unit (10^{6}, one million)
AC	Alternating Current
DC	Direct Current

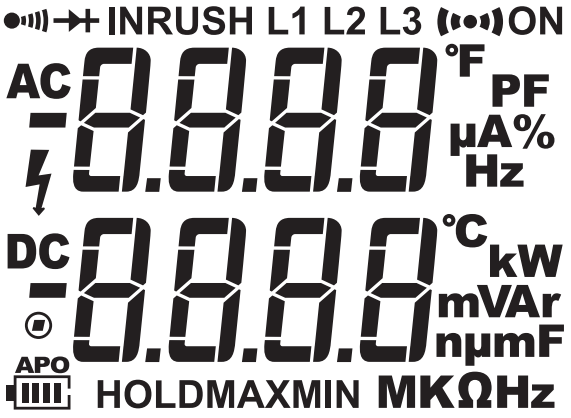

Easy to Read Display

Easily see your measurements on the big dual display. You'll never miss a reading no matter the lighting with the bright blue backlight to illuminate the way.

Measurement Dial

Volts AC (VAC) True RMS (50-400Hz)

Test power lines (120 to 480VAC), test 24VAC going to controls and test for transformer failure.

Ranges: 1000mV, 10V, 100V, 750V **Resolution:** 0.1mV
Accuracy: ±(1.5% + 10) 50Hz to 60Hz
±(2.0% + 10) 60Hz to 400Hz
Unspecified at 400Hz and greater
Minimum Input Voltage Range: >20 digits
Low Pass Filter: >1 kHz
Crest Factor: ≤ 3
Audio/Visual Hi-V Indicator: >30VAC/VDC
Input Impedance: 5MΩ
Overload Protection: 1000VDC or 750VAC rms

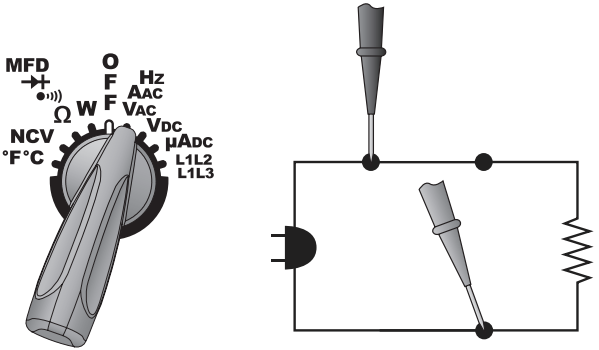

Volts DC (VDC)

Select VDC and measure DC voltages on circuit boards on more advanced HVACR systems and logic control boards.

Ranges: 1000mV, 10V, 100V, 1000V **Resolution:** 0.1mV
Accuracy: ±(0.5% + 5)
Input Impedance: 5MΩ
Overload Protection: 1000VDC or 750VAC rms

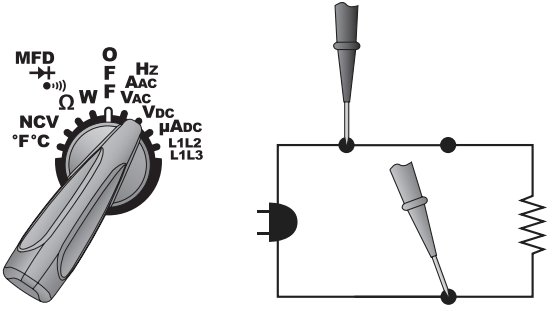

Non Contact Voltage (NCV)

Use NCV to check 24VAC from a thermostat or live voltage up to 600VAC. Always test a known live source before using. A segment graph and RED LED will display the presence of voltage. An audible beep increases from intermittent to continuous as intensity of field (EF) increases.

AC Voltage Detection Range: 24VAC to 600VAC (50-60Hz)

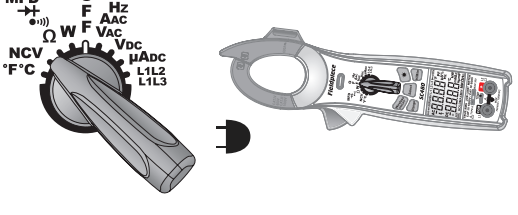

Amps AC (AAC) True RMS (50-60Hz)

Test isolated power lines. Press SELECT once on VAC/AAC/Hz position. Read AAC in upper display and VAC on the lower display at the same time.

Ranges: 100A, 600A **Resolution:** 0.01A **Crest factor:** ≤ 3
Accuracy: ±(2.0% + 10)
Minimum Input Current Range: >20 digits
Overload Protection: 600AAC **Jaw Opening:** 1.2in (30 mm)

Frequency (Hz) Through Clamp

Measure Hz on variable frequency drive motors. Turn dial to VAC/AAC/Hz and press SELECT twice. Hz will show in upper display and VAC on the lower display at the same time.

Range: 10Hz to 400Hz **Resolution:** 0.1Hz
Accuracy: ±(0.1% + 5)
Minimum current range: >7AAC (10 to 100Hz); >20AAC (100 to 400Hz) on 100AAC range; >25AAC (10 to 400Hz) on 600AAC range.
Overload Protection: 600AAC

Inrush AAC Current

Inrush mode captures the starting amp draw of a motor. Starting amp draw can assist in diagnosing a motor before it fails.

Activate Inrush mode

1 Rotate selector switch to VAC/AAC/Hz.
2 Press SELECT once to show AAC on upper display. Press INRUSH on the right side of meter to activate Inrush Mode.
3 Clamp jaw around the motor's start wire.
4 Turn motor on. The starting amp draw will hold on the upper display.
5 Press INRUSH to clear captured reading. Press INRUSH for 2 seconds to exit.

Inrush measurement period: 100-milliseconds
Minimum input: >2A on 100A range; >20A on 600A range

⚠ Note: AAC or Hz through the clamp and VAC through the test leads can be measured simultaneously. However, if only AAC, Frequency (Hz), or Inrush AAC is measured through the clamp, test leads and thermocouples must be unplugged from the meter.

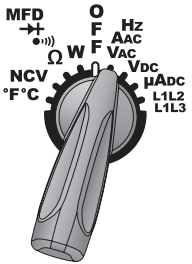

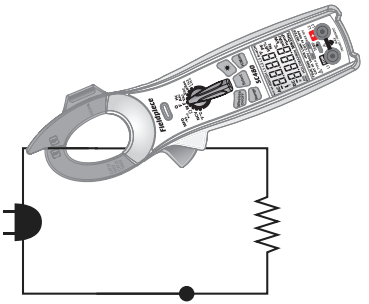

Amps AC (AAC), Frequency (Hz) through the clamp and Inrush AAC current is measured in the VAC/AAC/Hz switch position shown above.

MicroAmps DC (µADC)

Test flame rectifier diodes on a heater control. Connect leads between flame sensor probe and control module. Turn heating unit on. When the flame is on, there should be a measurable µADC signal, typically under 10µADC. Compare measurement to manufacturer's specification to determine if replacement is necessary.

Ranges: 1000µA **Resolution:** 0.1µA
Accuracy: ±(1.0% + 5) **Volts burden:** 5V
Overload Protection: 600VDC or 600VAC rms

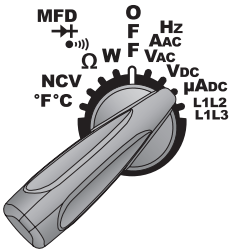

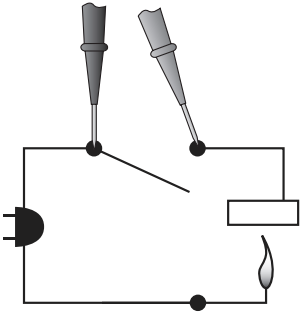

Capacitance (MFD)

Test motor start and run capacitors. Capacitors are one of the most failure prone components in a HVACR system. Disconnect from power and any resistors found between terminals. Discharge capacitor before testing. If dIS.C is displayed, the capacitor needs to be fully discharged to test. Press SELECT three times to enter Capacitance mode.

Ranges: 10nF, 100nF, 1000nF, 10µF, 100µF, 1000µF, 10mF
Accuracy: ±(3% + 15) 10nF, ±(3% + 5) 100nF to 1000µF, ±(5% + 5) 10mF
Resolution: 0.01nF **Overload Protection:** 600VDC or 600VAC rms

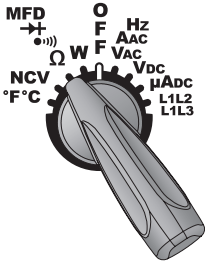

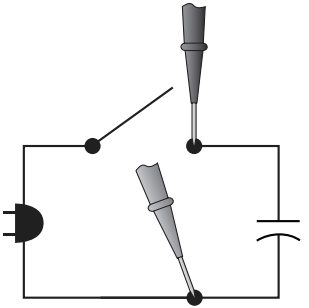

Discharge Cap First!

Resistance (Ω)

Used for "ohming out" a compressor. A 0.01Ω resolution is useful to test the resistance between the terminal poles because the values are typically very low. Resistance is default test in this switch position. For best practice, use a megger (Fieldpiece SMG5) to measure motor winding insultion to ground.

Ranges: 100Ω, 1000Ω, 10kΩ, 100kΩ, 1000kΩ, 10MΩ, 50MΩ
Resolution: 0.01Ω
Accuracy: ±(1.0% + 15) 100Ω, ±(1.0% + 5) 1000Ω to 100kΩ, ±(1.5% + 5) 1000kΩ, ±(3.0% + 5) 10MΩ to 50MΩ
Open circuit volts: -1.1VDC typical, -3.2VDC (100Ω range)
Overload Protection: 600VDC or 600VAC rms

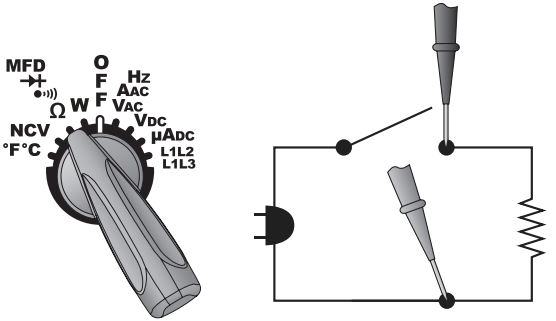

Continuity (•))

Perfect for checking isolated fuses, use the continuity function to test whether a circuit is open (no beep, no green LED) or closed (beep and green LED). Press SELECT once to enter Continuity mode.

Range: 100Ω **Resolution:** 0.01Ω **Response time:** 100ms
Audible beep: <30Ω
Visual Indicator: Green LED
Overload Protection: 600VDC or 600VAC rms

Diode Test (→+)

Test diodes for proper forward and reversed-biased functions. A voltage will display in forward-bias and "OL" in reversed-bias. Press SELECT twice to enter Diode mode.

Test current: 0.8mA (Approx.) **Accuracy:** ±(1.5% + 5)
Open circuit volts: 3.2VDC typical **Audible beep**: <0.05V
Visual Indicator: Green LED
Overload Protection: 600VDC or 600VAC rms

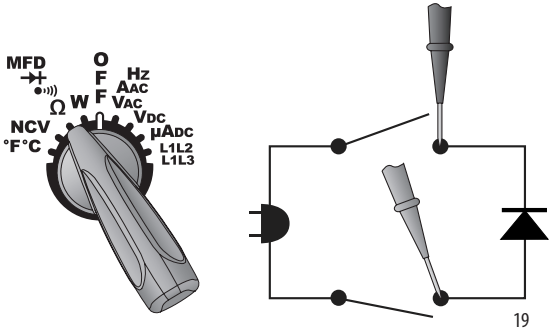

Temperature

Plug any Type K thermocouple directly into the meter to measure temperature. The meter beeps when a thermocouple is plugged in and double beeps when unplugged. Measure outdoor dry bulb temperature for target superheat while at the condensor with the Type K thermocouple input.

Insulated cold junction is located inside the meter and allows for accurate measurements even in rapidly changing ambient temperatures (going from rooftop to freezer). No adapter is required.

By default, °F will show on top display and °C on bottom display.

Range: -58°F to 2372°F, (-50°C to 1300°C) **Resolution:** 0.1°
Accuracy: ±(1°F)* 32°F to 120°F, ±(1°C) 0°C to 49°C
±(1%+2°F) 32°F to 932°F, ±(1%+1°C) 0°C to 500°C
±(2%+6°F) -58°F to 32°F, ±(2%+3°C) -50°C to 0°C
±(2%+6°F) 932°F to 2372°F, ±(2%+3°C) 500°C to 1300°C
Sensor type: Type K thermocouple
Overload protection: 30 VDC or 30VAC rms
*After field calibration

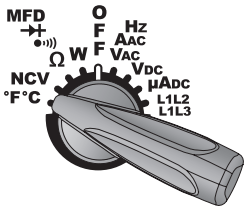

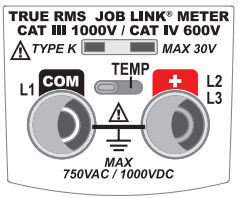

Unplug Leads and Slide TEMP Switch to the Right

Temperature Calibration

Thermocouples (T/C) are not calibrated directly. Instead, each T/C jack (T1 and T2) must be calibrated to the particular T/C that is plugged into it. Though it's possible for a calibration to hold for years, it's best practice to calibrate regularly if only to verify accuracy. Labelling your T/C, T1 or T2, will help ensure using the same T/C for T1 and T2 ports.

Calibration is quick and easy, requiring just a known temperature to calibrate to. Ice water is probably the most accurate and readily available known temperature (32.0°F, 0.0°C) in the field.

1. Rotate dial to the °F °C position.
2. Plug one thermocouple to be calibrated into the Type K input.
3. Unscrew A and B and remove the battery cover.
4. Stabilize a large cup of ice water. Stir the ice with the water until temperature stays at a stable value.
5. Immerse the thermocouple probe and let it stabilize. Keep stirring water to prevent thermocouple from direct contact with ice.
6. Use a small screwdriver to adjust calibration Temp Cal pot below the battery as close to 32°F(0°C) as you would like.

Note: J1-J2 switch is for factory calibration purposes only. Do not switch from J2.

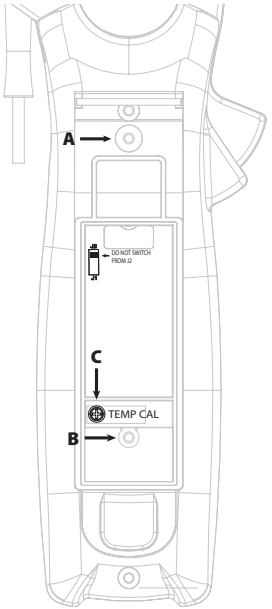

Power (Watts, VAr, VA, PF)

Help determine system efficiency by measuring the power exerted by the system. The actual power consumed by the system is called Active Power and is measured in watts (W or kW). Reactive loads, inductors and capacitors, dissipate zero power, but they drop voltage and draw current giving the deceptive impression they do dissipate power. This is called Reactive Power and is measured in Volt-Amps-Reactive (VAr). The combination of reactive and real power is called Apparent Power and is the product of a system's voltage and current, without phase angle consideration. Apparent Power is measured in Volt-Amps (VA).

Power Factor (PF) is the ratio of the power the system draws from the main power supply and the power the system actually consumes. An ideal PF is 1, meaning the system consumes all the power it draws. Due to inductive and capacitive loads of the system however, this is not possible.

To take the power reading you need to measure both voltage and amperage simultaneously. Connect test leads to main power supply terminals and secure amp clamp around the same line that the positive (red) test lead is connected to.

See Power Factor in top display and Power in bottom display. Press SELECT to toggle Active Power (W), Reactive Power (VAr), Apparent Power (VA).

⚠ CAUTION! DO NOT MEASURE VOLTAGE LINES OR EXPOSE THE METER TO LIVE POWER LINES EXCEEDING 750VAC/1000VDC NOMINAL VOLTAGE.

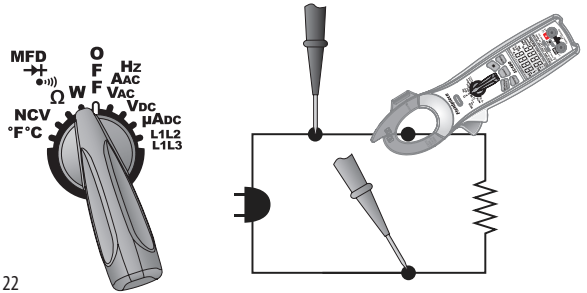

Power (Watts, VAr, VA, PF)

Accuracy: Stated accuracy @ 73°F±9°F (23°C±5°C), <75%RH
Effective Current Range: 2AAC to 600AAC
Effective Voltage Range: 80VAC to 750VAC
Effective Frequency Response: 50Hz to 60Hz
Power accuracies unspecified for non-sinusoidal current waveforms

Active Power (W)
Ranges: 1000W, 10kW, 100kW, 450kW
Resolution: 0.1W
Accuracy: ±(5.0% + 5) >10A
±(10.0% + 5) 2A to 10A on 450kW range

Reactive Power (VAr)
Ranges: 1000VAr, 10kVAr, 100kVAr, 450kVAr
Resolution: 0.1VAr
Accuracy: ±(5.0% + 5) >10A on 1000VAr range
±(10.0% + 5) 2A to 10A

Apparent Power (VA)
Ranges: 1000VA, 10kVA, 100kVA, 450kVA
Resolution: 0.1VA
Accuracy: ±(5% + 5) >2A

Power Factor (PF)
Ranges: -1.00 to -0.30 and 0.30 to 1.00
Resolution: 0.01 PF
Accuracy: ±(5.0% + 5) >10A, ±(10.0% + 5) 2A to 10A
PF readings will be displayed on upper display

Phase Rotation Test (L1L2, L1L3)

Connect 3-phase power lines in the correct order to the terminals of a motor to ensure the motor turns in the intended direction. Incorrect wiring can damage some equipment. The terminals on the motor are usually marked L1, L2, and L3; however, the wires supplying power usually are not. Perform a simple phase rotation test with two test leads to quickly identify the order of 3-phase power lines.

Range: 80±5 VAC to 600VAC (50Hz to 80Hz) **Resolution:** 0.1V
Accuracy: ±(1.5% rdg + 10 dgts)
Overload Protection: 600VDC or AC rms

How to Perform a Phase Rotation Test

Set 1: Select Function

Switch to L1L2 L1L3. Plug black test lead into the COM (L1) port and red test lead to the VΩ (L2 L3) port on the SC480.

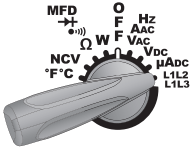

You will see "L1L2" blinking to indicate phase rotation test is ready to begin.

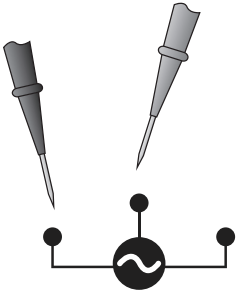

Step 2: Connect Leads

Connect both black and red test leads to any two of the three phase voltage lines in question. The line voltage will hold on the bottom display. Blinking L1 and L2 disappear. L3 will blink on top display to indicate test is ready for Step 2.

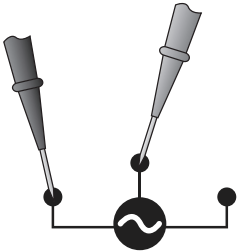

Important: Step 2 must be performed within 5 seconds of completing Step 1 or "Err" will show and Step 1 must be repeated.

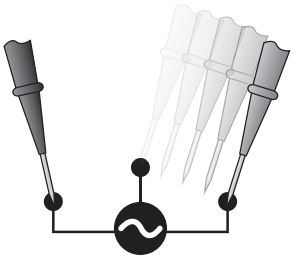

Step 3: Move Red Lead

With the black lead still on "L1", move the red test lead to the third 3-phase voltage line. The line voltage will hold on the bottom display. The top display will show L123 indicating forward or L321 indicating reversed.

Simply swap any two lines to change the direction. You can verify this by performing the test again.

Phase Rotation Testing Tips

1 The measured voltage during phase rotation test must be >80.0±5VAC. If not, the phase rotation test can not be performed and "Err" will show on the top display.
2 After phase rotation test is complete, press SELECT button to begin a new phase rotation test.
3 Be sure to connect test leads to 3-phase voltage lines for at least 2 seconds until voltage reading holds on the bottom display
4 Phase rotation test cannot be performed on Hi-frequency voltage signals. Be sure voltage lines are within 50-80Hz to perform the phase rotation test.

Modular Expandability

Your SC480 is compatible with all Fieldpiece Accessory Heads. With Fieldpiece Accessory Heads, you can measure any available parameter, and read the measurement on your new meter's display in real-time, Hold, Max, and min.

Rotate the selector to VDC and stay in mV range. Remove the probe tips of your test leads, and connect your accessory head (model AAV3 shown).

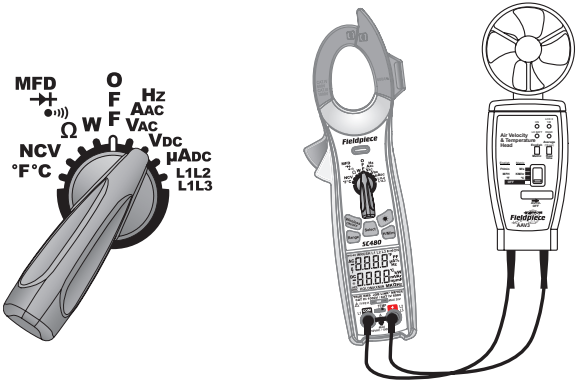

Visit www.fieldpiece.com to see all of the different Accessory Heads that Fieldpiece offers.

Works with Job Link® System

Do More with the Job Link® System

Directly document critical electrical measurements at the job site, and add them to professional PDF reports. No separate transmitter required.

Combine your new clamp meter with other Job Link System tools to create seamless reports. Show customers what needs to be done (Pre-work) and prove how that work helped (Post-work).

Other Job Link® System Tools

- SM480V Refrigerant Manifold + Micron Gauge (4 Port)
- SM380V Refrigerant Manifold + Micron Gauge (3 Port)
- JL3KH6 Wireless Charge and Air Test Kit
- JL3KR4 Wireless Charge Test Kit
- SRS3 Wireless Refrigerant Scale

Go to www.fieldpiece.com for all Job Link® System options.

Wireless Mode

Send electrical measurements wirelessly from SC480 directly to the Job Link® mobile app. No JL2 transmitter required.

1 Select any switch position other than L1L2 and NCV.
2 Press WIRELESS ON/OFF to toggle wireless mode. *To maximize battery life, wireless mode is OFF by default. To save WIRELESS ON/OFF setting, allow 3 seconds before switching positions.*
3 Assign your meter in the Job Link app tool manager.
4 Tap on the Electrical tab in the Job Link measurement screen and begin logging measurements from your clamp meter.

Wireless Specifications

Wireless range: Up to 1000 feet (305m) line of sight. Distance decreases through obstructions.

Wireless frequency: 2.4 GHz

Wireless Compatibility

Minimum Device Requirement:

BLE 4.0 devices running iOS® 7.0 or Android™ 5.0
(Latest compatibility at www.fieldpiece.com)

Functions

Auto Power Off

Auto power off or APO will automatically turn off your meter after 30 minutes of inactivty. By default it is activated and APO will show on the display. To disable, turn meter off. Hold Range and power on the meter by turning the selector dial to any range. Release Range after the beep. APO will no longer display over the battery icon.

Hold/Max/min

Press H/M/m to cycle through Hold, Maximum, minimum, or real-time measurements. When MAXMIN is displayed, you are seeing the real-time measurement, but Max and min values are still being recorded. Press H/M/m for 1 second to clear and exit. Press H/M/m to log an SC480 measurement in Job Link mobile app. See Wireless Section for Job Link compatibility details.

High Voltage Warning

The ϟ symbol will display when measuring >30VAC/VDC. An audible beep will be heard and red LED will be shown. *To toggle the high voltage beeper, hold SELECT when turning on. "Beep On" or "Beep Off" is shown on the display when toggled.*

Battery Replacement

When your meter's battery is low, the battery icon will appear empty and blink for 30 seconds. "bAtt" will display and meter will power off.

Turn dial to OFF position, disconnect test leads and remove the battery cover with magnet strap on the back of your meter. Remove old battery and replace with a standard 9V battery only. Be sure to re-insert the magnet strap before re-installing the battery cover.

Backlight Illumination

See your measurements in dark environments. Press ☼ to illuminate the display. Illumination will stay on for 5 minutes before turning off automatically. Illumination can be turned off at any time by pressing ☼.

Manual Ranging

Press Range to disable auto-ranging and set your clamp meter to a specific range. Manual ranging applies to VAC, VDC, MFD, W and resistance (Ω). Press for 1 second to exit manual ranging and return to auto-ranging.

Certifications and Module IDs

UL 61010-1, Third Edition

EN61010-1, EN61010-2-032
EN61010-2-033, EMC EN61326-1

FCC ID: 2ALHR005

RCM (N22675)

WEEE

Restrictions of Hazardous Substances Compliant

IC: Industry Canada
22518-BT005

IFETEL: Federal Telecom Institute
RCPFI2A19-0287

CATIV 600V, CATIII 1000V or above. Included test leads are gold-plated and have removable safety caps.
CATIII 1000V, CATIV 600 class II and pollution degree 2 indoor use comply with CE, RoHS compliant.
CATIII is designated for measurements performed in the building installation.
CATIV is for measurements performed at the source of the low-voltage installation.

Specifications

Display: 10000 count dual display
Backlight: 5 minute duration with auto-off, blue color
Overrange: "OL" or "-OL" is displayed
Measurement rate: 3.3 times per second, nominal
Zero: Automatic
Operating environment: 32°F to 122°F (0°C to 50°C) at <70%RH
Storage temperature: -4°F to 140°F (-20°C to 60°C), 0 to 80%RH (with battery removed)
Accuracy: Stated accuracy @ 73°F±9°F (23°C±5°C), <75%RH
Temperature coefficient: 0.1 x (specified accuracy) per °C [0°C to 19°C (32°F to 66°F), 28°C to 50° C (82°F to 122°F)]
APO (Auto Power Off): Approx. 30 minutes
Power: Single standard 9-volt battery, NEDA 1604, JIS 006P, IEC 6F22
Battery life: 100 hours typical alkaline (No wireless, no backlight)
Low battery indication: Battery icon blinks and "batt" is displayed when the battery voltage drops below the operating level
Dimensions: 247mm(H) x 79mm(W) x 48mm(D)
Weight: Approx. 345g including battery
Altitude: Up to 6562 ft (2000m)
Overload protection: 1000VDC or 750VAC rms unless otherwise stated
Test leads: Use UL listed test leads that comply to UL61010-031 rated CATIV 600V, CATIII 1000V or above. Included test leads are gold-plated and have removable safety caps.

Please operate the instrument following all instructions of the operator's manual to avoid impairing the safety of the product.

FCC Statement

This equipment has been tested and found to comply with the limits for a Class B digital device, pursuant to Part 15 of the FCC Rules. These limits are designed to provide reasonable protection against harmful interference in a residential installation. This equipment generates, uses and can radiate radio frequency energy and, if not installed and used in accordance with the instructions, may cause harmful interference to radio communications. However, there is no guarantee that interference will not occur in a particular installation. If this equipment does cause harmful interference to radio or television reception, which can be determined by turning the equipment off and on, the user is encouraged to try to correct the interference by one or more of the following measures:

1. Reorient the receiving antenna.
2. Increase the separation between the equipment and receiver.
3. Connect the equipment into an outlet on a circuit different from that to which the receiver is connected.
4. Consult the dealer or an experienced radio/TV technician for help.

FCC Caution:

Any changes or modifications not expressly approved by the party responsible for compliance could void the user's authority to operate this equipment.

This device complies with Part 15 of the FCC Rules. Operation is subject to the following two conditions: (1) This device may not cause harmful interference, and (2) this device must accept any interference received, including interference that may cause undesired operation.

This device and its antenna(s) must not be co-located or operating in conjunction with any other antenna or transmitter.

IMPORTANT NOTE: FCC Radiation Exposure Statement:

This equipment complies with FCC radiation exposure limits set forth for an uncontrolled environment. This equipment should be installed and operated with minimum distance 20cm between the radiator & your body.

IC Statement

This device contains licence-exempt transmitter(s)/receiver(s) that comply with Innovation, Science and Economic Development Canada's licence-exempt RSS(s). Operation is subject to the following two conditions:

1. This device may not cause interference.
2. This device must accept any interference, including interference that may cause undesired operation of the device.

L'émetteur/récepteur exempt de licence contenu dans le présent appareil est conforme aux CNR d'Innovation, Sciences et Développement économique Canada applicables aux appareils radio exempts de licence. L'exploitation est autorisée aux deux conditions suivantes :

1. L'appareil ne doit pas produire de brouillage;
2. L'appareil doit accepter tout brouillage radioélectrique subi, même si le brouillage est susceptible d'en compromettre le fonctionnement.

IMPORTANT NOTE: IC Radiation Exposure Statement:

This equipment complies with IC RSS-102 radiation exposure limits set forth for an uncontrolled environment. This equipment should be installed and operated with minimum distance 20cm between the radiator & your body.

Cet équipement est conforme aux limites d'exposition aux rayonnements IC établies pour un environnement non contrôlé. Cet équipement doit être installé et utilisé avec un minimum de 20cm de distance entre la source de rayonnement et votre corps

IFETEL Statement

La operación de este equipo está sujeta a las siguientes dos condiciones: (1) es posible que este equipo o dispositivo no cause interferencia perjudicial y (2) este equipo o dispositivo debe aceptar cualquier interferencia, incluyendo la que pueda causar su operación no deseada.

The operation of this equipment is subject to the following two conditions: (1) this device or device may not cause harmful interference, and (2) this device or device must accept any interference, including interference that may cause undesired operation.

Limited Warranty

This product is warranted against defects in material or workmanship for one year from date of purchase from an authorized Fieldpiece dealer. Fieldpiece will replace or repair the defective unit, at its option, subject to verification of the defect.

This warranty does not apply to defects resulting from abuse, neglect, accident, unauthorized repair, alteration, or unreasonable use of the machine.

Any implied warranties arising from the sale of a Fieldpiece product, including but not limited to implied warranties of merchantability and fitness for a particular purpose, are limited to the above. Fieldpiece shall not be liable for loss of use of the machine or other incidental or consequential damages, expenses, or economic loss, or for any claim of such damage, expenses, or economic loss.

State laws vary. The above limitations or exclusions may not apply to you.

Obtaining Service

Visit **www.fieldpiece.com/rma** for the latest information on how to obtain service. Warranty for products purchased outside of the U.S. should be handled through local distributors. Visit our website to find your local distributor.

SC480

© Fieldpiece Instruments, Inc 2021; v16