GENERAFRIO
LIDERES EN SISTEMAS DE AIRE ACONDICIONADO Y REFRIGERACION

Honeywell

N05, N10 SERIES

NON-SPRING RETURN DIRECT-COUPLED DAMPER ACTUATORS FOR MODULATING AND FLOATING CONTROL

PRODUCT DATA

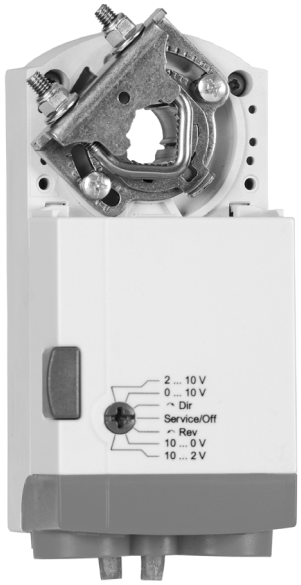

GENERAL

This non-spring return direct-coupled damper actuator provides modulating and floating/2-position control for:

- air dampers,
- VAV units,
- air handlers,
- ventilation flaps,
- louvers, and
- reliable control for air damper applications with up to 10 sq ft / 44 lb-in. (5 Nm) and 20 sq ft / 88 lb-in. (10 Nm) (seal-less damper blades; air friction-dependent).

FEATURES

- **Declutch for manual adjustment**
- **Adjustable mechanical end limits**
- **Removable access cover for direct wiring**
- **Mountable in any orientation**
- **Function selection switch for selecting modulating or floating/2-position control**

SPECIFICATIONS

Supply voltage	24 Vac/dc -15%/+20%, 50/60 Hz
Nominal voltage	24 Vac/dc, 50/60 Hz

All values stated hereinafter apply to operation under nominal voltage conditions.

Power consumption	
MN7505	5 VA / 2 W
MN7510	5 VA / 2 W
Control signal	
Modulating	(0)2...10 Vdc
Floating/2-Position	24 Vac/dc
Ambient limits	
Ambient operating limits	-5...+140 °F (20...+60 °C)
Ambient storage limits	-22...+176 °F (-30...+80 °C)
Relative humidity	5...95%, non-condensing
Safety	
Protection standard	IP54
Protection class	II as per EN 60730-1
Overvoltage category	II
Lifetime	
Full strokes	60000
Repositions	1.5 million
Mounting	
Round damper shaft	3/8 in…5/8 in.
Square damper shaft	1/4 in…1/2 in.; 45° steps
Shaft length	min. 1-5/8 in.
End switches (when included)	
Rating	Class II
Triggering points	5° / 85°
Torque rating	44 lb-in. (5Nm) / 88 lb-in. (10Nm)
Runtime for 90°	
mod. (dc / 50/60 Hz ac)	90 sec
floating (dc / 60 Hz ac)	90 sec
floating (50 Hz ac)	110 sec
Rotation stroke	95° ± 3°
Dimensions	see “Dimensions” on page 8
Weight (without cables)	1.0 lbs.
Noise rating	35 dB(A) max. at 1 m

® U.S. Registered Trademark
Copyright © 2005 Honeywell Inc.
All rights reserved

63-2633

EN0B-0545GE51 R0805

PRODUCT IDENTIFICATION SYSTEM

M—Electrical Motor
N—Fail Safe Function (Non-Spring Return)
61—24V Floating Control
75—24V Modulating Control
05—44 lb-in. (5 Nm)
10—88 lb-in. (10 Nm)
A—Standard Model
1—No Feedback
2—Voltage Feedback Signal
0—No Internal Auxiliary Switches
2—Two Internal Auxiliary Switches
XX—System Controlled Numbers

M	N	75	10	A	2	0	XX

BASIC FEATURES

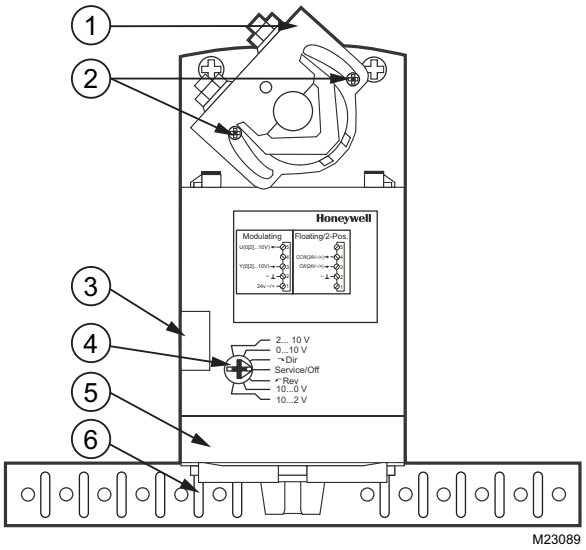

Fig. 1. Setting units and control elements

Legend for Fig. 1:
1) Universal shaft adapter
2) Mechanical end limits (manually adjustable)
3) Declutch button
4) Function selection switch
5) Removable access cover
6) Anti-rotation bracket

Contents of Package

The delivery package includes the actuator, parts 1 through 6 (see Fig. 1), plus two cable grommets and a spare cable grommet.

RUN MODES

The function selection switch (see Fig. 2) can be used to place the actuator into any one of two different modes:

- Service/Off;
- the floating/2-position run mode (“Dir” for CCW-closing dampers or “Rev” for CW-closing dampers); and
- the modulating run mode.

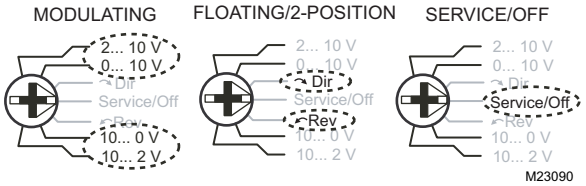

Fig. 2. Function selection switch

Power-Off Behavior

If power is removed, the shaft adapter remains in position.

Service/Off

If the function selection switch is set to the “Service/Off” position, then all rotary movement is cancelled, and all control signals are ignored, thus allowing the actuator to be manually operated safely.

Floating/2-Position Run Mode

Without Feedback Signal

If, however, the function selection switch has been set to one of the two floating/2-position control settings - but the actuator has not been wired for a feedback signal (see Fig. 12 and Fig. 13) - then as soon as operating power is applied, the shaft adapter will run according to the control signals applied.

With Feedback Signal

If the function selection switch has been set to one of the two floating/2-position control settings - and if the actuator has been wired for a feedback signal (see Fig. 12 and Fig. 13) - then as soon as operating power is applied, the shaft adapter will likewise run first completely counterclockwise and then completely clockwise (see also section “Adaption”), after which it will run according to the control signals applied.

Modulating Run Mode

If the function selection switch has been set to one of the four modulating control settings - and if the actuator is wired correspondingly (see Fig. 10) - then as soon as operating power is applied, the shaft adapter will run first completely counterclockwise and then completely clockwise (see also section “Adaption”), after which it will run according to the control signals applied.

Table 1 describes, for the floating mode, the shaft adapter behavior (“stops,” rotates “CCW,” or rotates “CW”) in dependence upon the control signals applied to terminals 3 and 4 and upon the function selection switch setting.

Table 2 describes, for the 2-position mode, the shaft adapter behavior (“stops,” rotates “CCW,” or rotates “CW”) in dependence upon the control signals applied to terminals 3 and 4 and upon the function selection switch setting.

Table 3 describes, for the modulating mode, the shaft adapter behavior (“stops,” rotates “totally CCW,” rotates “totally CW,” runs to “proportional” position, or runs to “50%” of max. stroke) in dependence upon the control signals applied to terminals 3 and 4 and upon the function selection switch setting.

Table 1. Shaft adapter behavior in the floating mode

control signal at		switch settings				
terminal 3	terminal 4	0[2]...10V	Dir	Service/Off	Rev	10...0[2] V
open	open	--	stops	stops	stops	--
open	24 Vac/dc	--	CCW	stops	CW	--
24 Vac	open	--	CW	stops	CCW	--

Table 2. Shaft adapter behavior in the 2-position mode

control signal at		switch settings				
terminal 3	terminal 4	0[2]...10V	Dir	Service/Off	Rev	10...0[2] V
24 Vac	open	--	CW	stops	CCW	--
24 Vac	24 Vac/dc	--	CCW	stops	CW	--

Table 3. Shaft adapter behavior in the modulating mode

control signal at		switch settings				
terminal 3	terminal 4	0[2]...10V	Dir	Service/Off	Rev	10...0[2] V
open	open	totally CCW	--	stop	--	totally CCW
	24 Vac/dc	50%	--	stop	--	50%
< min control signal plus 0.24 V	open	totally CCW	--	stop	--	totally CW
	24 Vac/dc	50%	--	stop	--	50%
between min. control signal plus 0.24 V and max. control signal minus 0.24	open	proportional	--	stop	--	proportional
	24 Vac/dc	50%	--	stop	--	50%
> max. control signal minus 0.24 V	open	totally CW	--	stop	--	totally CCW
	24 Vac/dc	50%	--	stop	--	50%

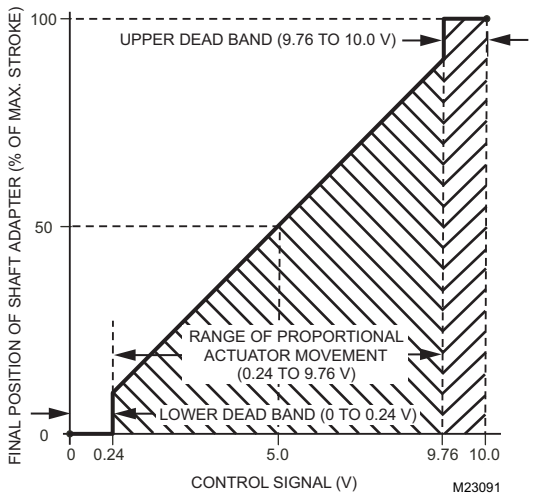

Fig. 3. Final shaft adapter position in dependence upon control signal (example function selection switch setting of 0...10 V)

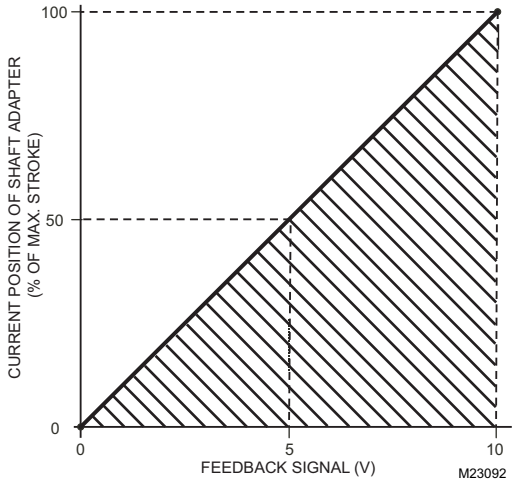

Fig. 4. Feedback signal in dependence upon current position of shaft adapter (example function selection switch setting of 0...10 V)

Adaption

Adaption is a function in which the actuator re-maps its feedback signal and control signal in accordance with repositioned mechanical end limits (see also Fig. 6) and thus recognizes their new positions.

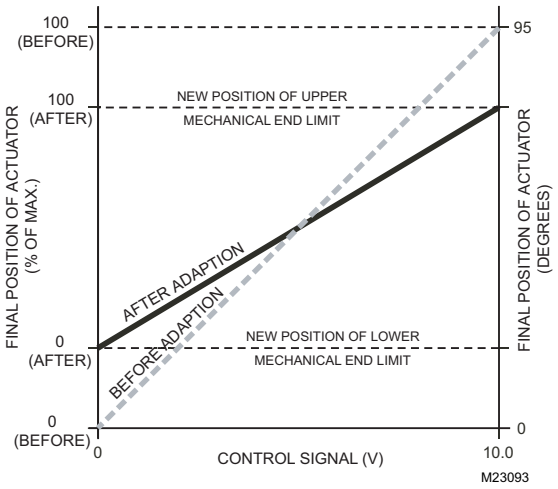

Fig. 5. Adaption (function selection switch set to 0...10 V)

Adaption will be carried out whenever the actuator is in the modulating mode or the floating plus feedback mode or the 2-position plus feedback mode and

- the user powers up (from a totally powerless condition) the actuator; or
- the user sets the function selection switch to the “Service/Off” setting for at least 2 seconds and then back to its previous setting; or
- the control signal's value rises up into the upper dead band (i.e. to more than the max. control signal minus 0.24 V) or drops down into the lower dead band (i.e. to less than the min. control signal plus 0.24 V), after which the shaft adapter must then remain at the respective (upper or lower) mechanical end limit for at least 3 seconds. However, in this case, the actuator will then recognize the position of only the respective (upper or lower) mechanical end limit.

Overriding

An override is a condition in which a 24 V signal is applied to terminal 4 of an actuator in the modulating mode, thus causing the actuator to ignore the control signal at terminal 3, whereupon it will instead move to a position of 50% of its maximum stroke (see Table 3).

Feedback

If correspondingly wired (see Fig. 10, Fig. 11 and Fig. 12), the actuator provides, via terminal 5, a feedback signal proportional to the actual position of the shaft adapter.

MANUAL ADJUSTMENT

IMPORTANT

To prevent equipment damage, you must remove power or set the function selection switch to the “Service/Off” position before manual adjustment.

After removing power or setting the function selection switch to the “Service/Off” position, the gear train can be disengaged using the declutch button, permitting the shaft adapter to be manually rotated to any position. If you have wired the actuator for feedback signal, then, after adaption, the feedback signal will follow the new position.

Limitation of Rotation Stroke

Two adjustable mechanical end limits are provided to limit the angle of rotation as desired (see Fig. 7). The mechanical end limits must be securely fastened in place.

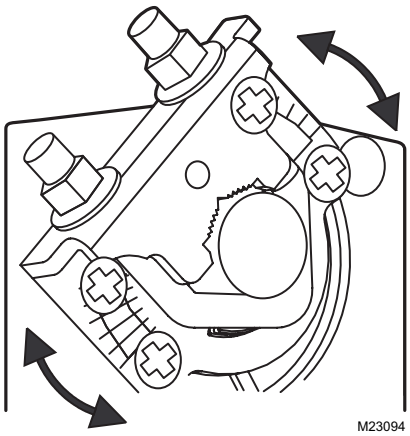

Fig. 6. Mechanical end limits

To ensure tight closing of the dampers, the shaft adapter has a total rotation stroke of 95°.

After adjusting the mechanical end limits, the user should trigger adaption (see section “Adaption”).

INTERNAL END SWITCHES

The internal end switches “A” and “B” are changeover switches which are activated when the shaft adapter moves past a position of 5° and 85°, respectively (see also Table 5).

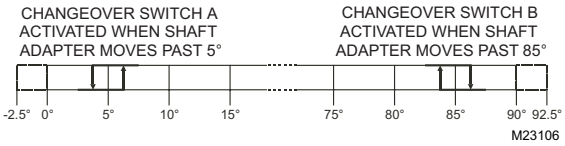

Fig. 7. Internal end switch triggering points

INSTALLATION

⚠ CAUTION

To avoid personal injury (electrical shock) and to prevent equipment damage, before installation, you must remove power.

These actuators are designed for single-point mounting.

Mounting Instructions

All information and steps are included in the Installation Instructions (Product Literature No. 62-0224) supplied with each actuator.

Mounting Position

The actuators can be mounted in any position (IP54 is dependent upon orientation; see Fig. 9). Choose a mounting position permitting easy access to cables and controls

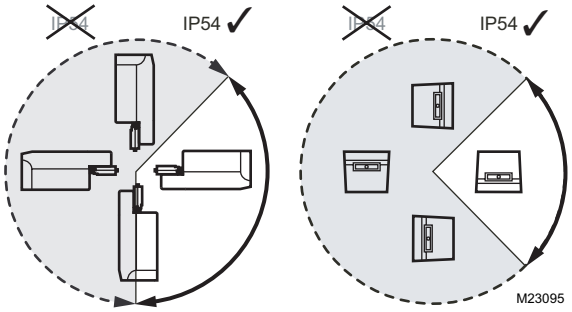

Fig. 8. Mounting for IP54

NOTE: Further, in order to guarantee IP54, only original Honeywell grommets may be used.

Anti-Rotation Bracket and Screws

If the actuator is to be mounted directly on a damper shaft, use the anti-rotation bracket and screws included in the delivery package. The min. distance between the center of the damper shaft and the middle of the anti-rotation bracket is 3.35 in.; a max. of 4.25 in. is allowed (see also Fig. 14).

Depending upon the specifics of your mounting site, the actuator may shift in position slightly while tightening the screws at the top of the shaft adapter. The anti-rotation bracket features a T-piece with a 5-mm-long shank to accommodate for this movement. It is important to ensure that this play is not impeded.

Universal Shaft Adapter

The universal shaft adapter can be used for shafts of various diameters and shapes (round: 3/8...5/8 in. and square: 1/4...1/2 in.).

WIRING

⚠ CAUTION

To avoid personal injury (electrical shock) and to prevent equipment damage, before wiring, you must remove power.

Access Cover

IMPORTANT

Once the access cover has been removed, please take care to avoid damaging any of the parts now accessible.

The access cover can be unscrewed and removed in order to gain access to the terminal block(s) and perform wiring.

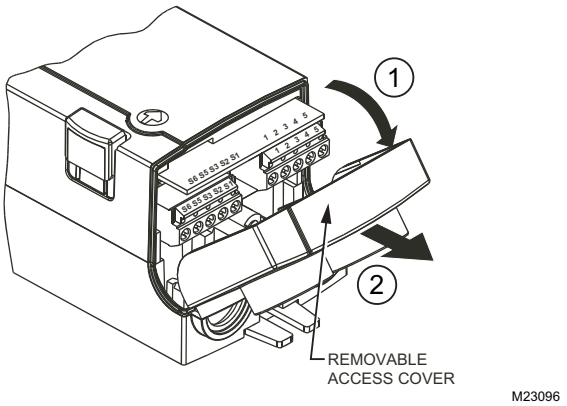

Fig. 9. Access Cover

Wiring Diagrams

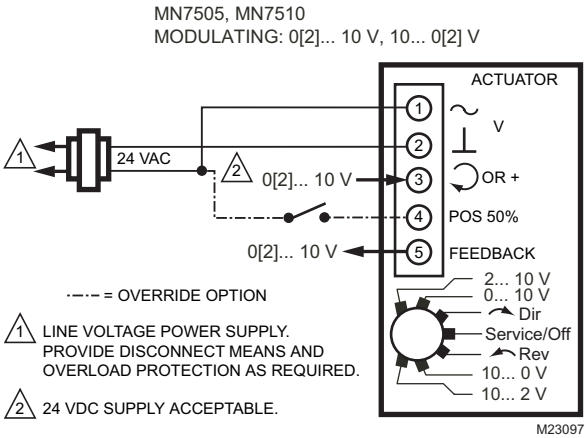

Fig. 10. MN7505/MN7510 (modulating mode)

Wiring Diagrams

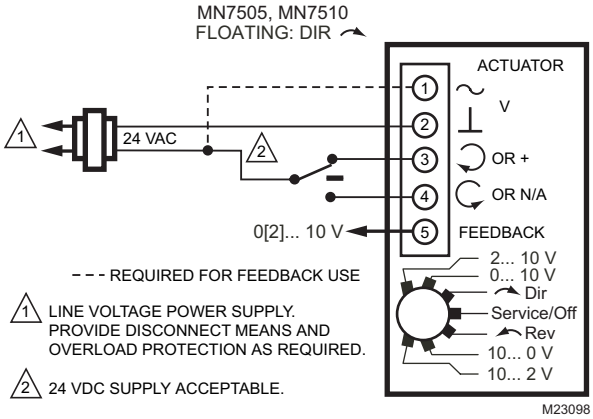

Fig. 11. MN7505/MN7510 (floating mode)

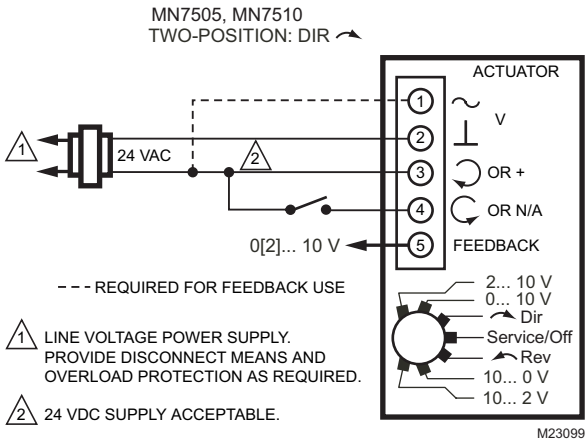

Fig. 12. MN7505/MN7510 (2-position mode)

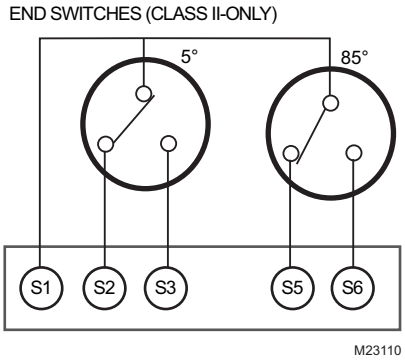

Fig. 13. End switches

NOTE: Both of the internal end switches must be connected to the same power source.

Table 4 and Table 5 summarize the information presented in the preceding wiring diagrams.

.

Table 4. Signals at terminals

terminal	mode		
	modulating	floating	2-position
1	24 V ~/+ (power)	unused *or* (with feedback) 24 V ~/+ (power)	unused *or* (with feedback) 24 V ~/+ (power)
2	common ~/-	common ~/-	common ~/-
3	0[2]...10 V (control)	24 V ~/+ (control signal)	24 V ~/+ (control signal)
4	24 V ~/+ (override)	24 V ~/+ (control signal)	24 V ~/+ (control signal)
5	0[2]...10 V (feedback)	unused *or* (with feedback) 0...10 V	unused *or* (with feedback) 0...10 V
NOTE: All cables connected to these terminals must be equipped with spark suppression.			

Table 5. Internal end switches

terminal	type of switch
S1	common lead for switches A and B
S2, S3	change-over switch A (S1/S2 opens and S1/S3 closes when shaft adapter moves CW past 5°; reverts to original state when shaft adapter moves CCW past 5°).
S5, S6	change-over switch B (S1/S5 opens and S1/S6 closes when shaft adapter moves CW past 85°; reverts to original state when shaft adapter moves CCW past 85°).

DIMENSIONS

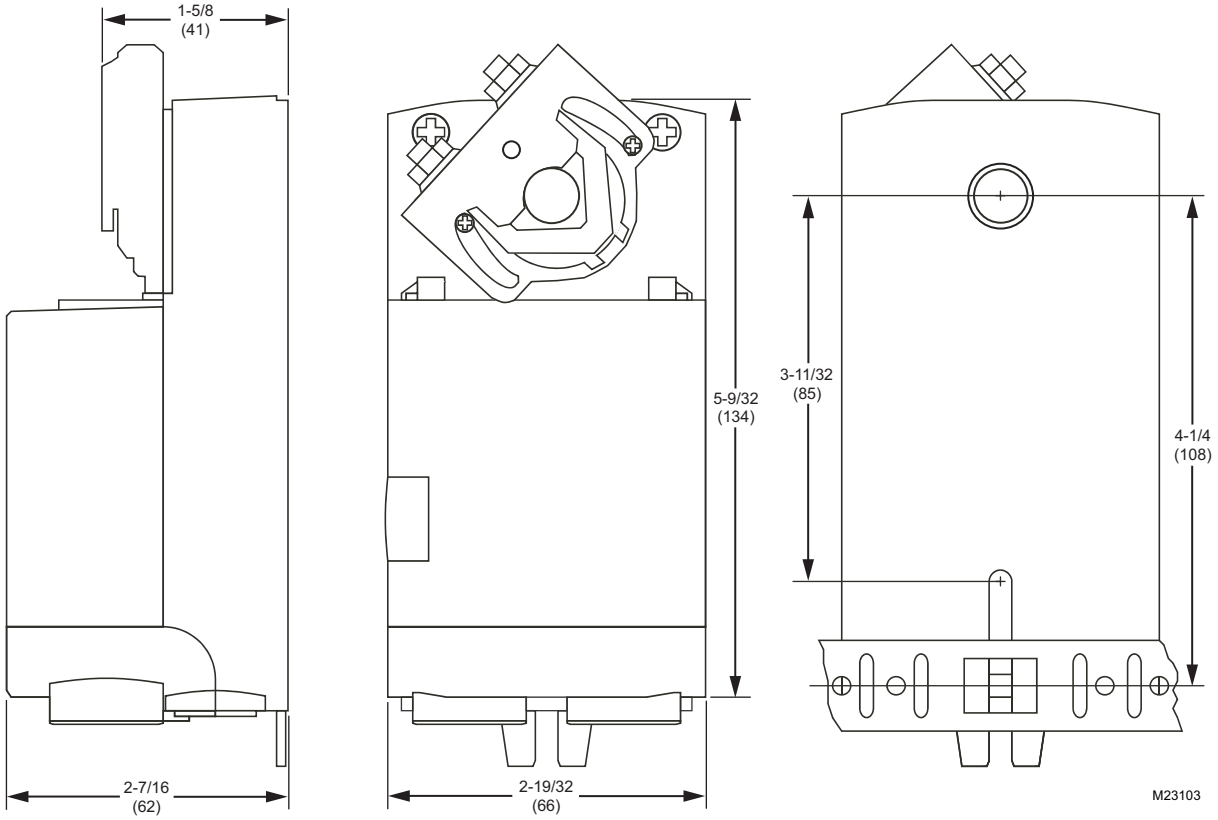

Fig. 14. Dimensions (in in.)

Automation and Control Solutions

Honeywell International Inc.
1985 Douglas Drive North
Golden Valley, MN 55422
customer.honeywell.com

Honeywell Limited-Honeywell Limitée
35 Dynamic Drive
Scarborough, Ontario M1V 4Z9

Honeywell

® U.S. Registered Trademark
© 2005 Honeywell International Inc.
63-2633 EN0B-0545GE51 R0805
A.A. Rev. 08-05

Printed in U.S.A. on recycled paper containing at least 10% post-consumer paper fibers.