GENERAFRIO

Fieldpiece®

Large Pipe Clamp Type K Thermocouple (3/4" to 4 1/8")

OPERATOR'S MANUAL

Model TC48

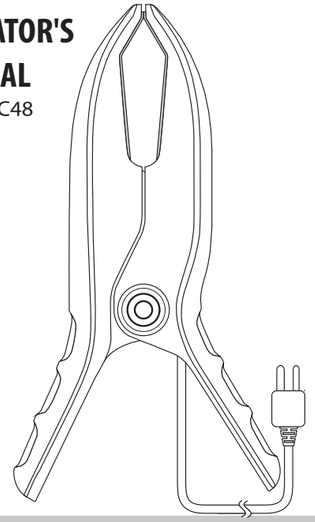

Quick Start

1 Plug your TC48 into a compatible Type K thermocouple mini jack.
2 Perform a field calibration for best accuracy. See "Field Calibration" later in this document.
3 Clamp onto an electrically-conductive pipe.
4 Take the measurement once the reading stabilizes.

What's Included

Large Pipe Clamp Type K Thermocouple
Emery Cloth for Cleaning Pipes
Operator's Manual
1 Year Limited Warranty

WARNING

Do not remove the clamp from a pipe by pulling on the cord. Doing so might damage the sensor.
The entire clamp may become hot when testing hot pipes or cylinders. Use caution when handling.

Description

Use your new TC48 Large Pipe Clamp Type K Thermocouple to take temperatures of pipes or any electrically conductive cylindrical surface measuring between 3/4" to 4 1/8" in diameter.

The reach of this clamp's jaws covers most sizes seen in residential and commercial systems. The clamp's design enables a quick setup onto the line set with a single-handed operation.

The patented Rapid Rail™ sensor is specifically designed for pipe readings. Readings are extremely fast and accurate. Easily measure the temperature of pipes that are affixed to walls or other surfaces, regardless of angle. Connect your TC48 to a thermometer with a compatible Type K thermocouple mini jack.

Operation

Field Calibration

Due to variances in the thermocouple wire and other parts of the system, a field calibration to a known temperature (ice water) should be conducted before use. Depending on the meter, field calibration typically gives an overall accuracy of ±1°F (±0.5°C). Refer to your meter's operating manual for calibration instructions.

Also note that calibration is recorded on the meter's side. Calibrate your meter to the clamp every time you connect the clamp to the thermocouple jack for best results.

Rapid Rail™ Sensor Advantages

Traditional pipe clamps sit on top of the pipe surface. Some sensors touch the pipe, some have a material between the pipe and the sensor. They can be affected by wind, heat, corrosion, insulation, paint, dirt, etc.

The Rapid Rail™ sensor uses the pipe itself to complete the thermocouple circuit. The pipe is part of the sensor! If you get a measurement, you know it's correct.

Because the pipe *is* the thermocouple junction, all you need is enough contact for conductivity. This means the clamp can sit on an angle or on a bend without loss in performance.

When used with the SMAN® Refrigerant Manifold, there is a beeper and to indicate whether or not the circuit is closed and a temperature is being measured:

Double beep = Open Circuit (No temp)
Single beep = Closed Circuit (Display temp)

If you don't get a pipe temperature measurement, there's something on the pipe that's blocking the electrical circuit (and accuracy). Sometimes you can slightly rotate the clamp back and forth around the pipe to cut through contaminants. Sometimes you need to sand the pipe a bit.

Maintenance

CLEANING: Clean the exterior with a damp cloth. Do not use detergents or solvents.

Specifications

Pipe Contact Surface Compatibility: Electrically conductive
Pipe Size Compatibility: 3/4" to 4 1/8"
(19.05mm to 104.78mm) OD
Sensor Type: Rapid Rail™ thermocouple
(nickel chromium / nickel aluminum)
Plug Type: Type K male mini plug
Measurement Range: -50°F to 257°F (-46°C to 125°C)
Plastic body and wire insulation are designed to withstand a maximum continuous temperature of 257°F (125°C).
Stabilization Time: 3 seconds typical
Accuracy: ±4°F (±2.2°C) thermocouple only
±1.0°F (±0.6°C) after field calibration*
*Meets California's Title 24 requirements
Cable Length: 6 feet (1.8m)
Weight: 0.56 lbs (255 g)
US Patent: www.fieldpiece.com/patents

Certifications

CE

RoHS
Restriction of Hazardous Substances Compliant

Limited Warranty

This product is warranted against defects in material and workmanship for one year from date of purchase from an authorized Fieldpiece dealer. Fieldpiece will replace or repair the defective unit, at its option, subject to verification of the defect.

This warranty does not apply to defects resulting from abuse, neglect, accident, unauthorized repair, alteration, or unreasonable use of the instrument.

Any implied warranties arising from the sale of a Fieldpiece product, including but not limited to implied warranties of merchantability and fitness for a particular purpose, are limited to the above. Fieldpiece shall not be liable for loss of use of the instrument or other incidental or consequential damages, expenses, or economic loss, or for any claim of such damage, expenses, or economic loss.

State laws vary. The above limitations or exclusions may not apply to you.

Obtaining Service

For international customers, warranty for products purchased outside of the U.S. should be handled through local distributors. Visit our website to find your local distributor.

Fieldpiece
Designed in USA
MADE IN CHINA

© Fieldpiece Instruments, Inc 2020; v07

More Tools from Fieldpeice
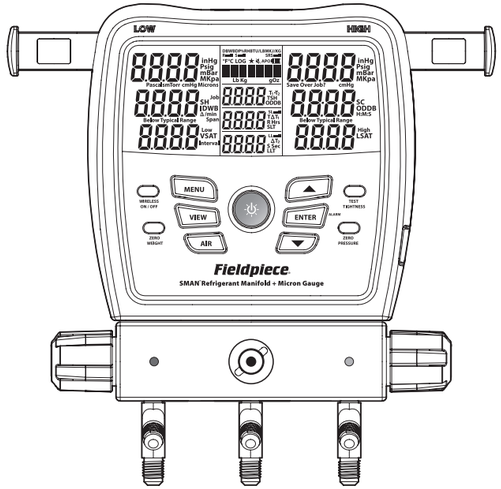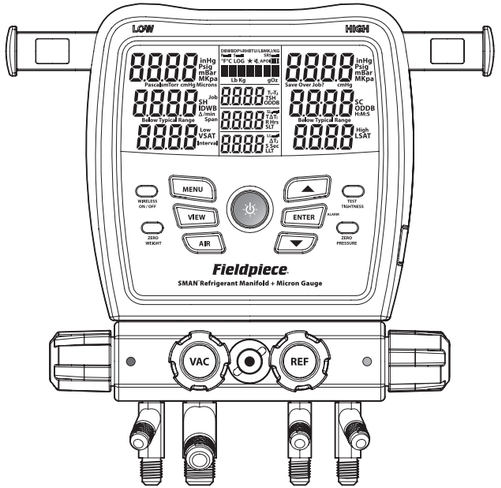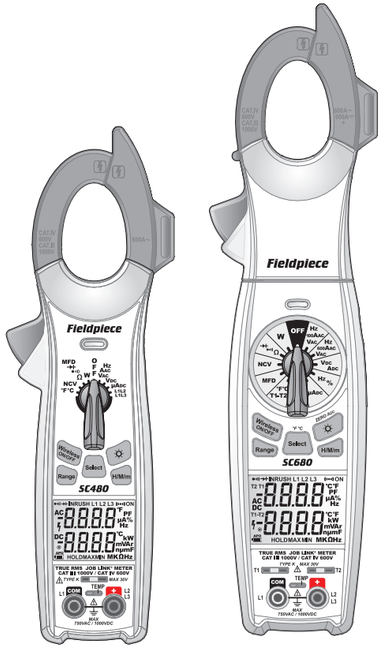
Use the Large Pipe Clamp Type K Thermocouple with any compatible fieldpiece products, such as the SMAN® Refrigerant Manifold and clamp meters. See fieldpiece.com for latest products.