Fail-Safe actuator used in typical Fire and Smoke damper applications

- Torque motor 180 in-lb [20 Nm]
- Nominal voltage AC 230 V
- Control On/Off
- @ 350°F [177°C] for 30 min
- 25 s, <15 s Motor/Fail-safe

5-year warranty

LISTED 94 D5 TEMP. IND. & REG. EQUIP. c UL us

Technical data

Electrical data	Nominal voltage	AC 230 V
	Nominal voltage frequency	50/60 Hz
	Nominal voltage range	AC 207...253 V
	Power consumption in operation	37 VA
	Power consumption in rest position	10 W, 19 VA (60 Hz 12 VA), end stop 54 VA, 0.25 A slow blow fuse *
	Inrush current (Imax)	3.7 A
	Electrical connection	3 Leads 32" [0.9 m], 18 AWG with 1/2" NPT conduit connector
	Overload Protection	electronic throughout 0...95° rotation
	Electrical Protection	grounded housing, 230 V
Functional data	Torque motor	180 in-lb [20 Nm] @ 350°F [177°C] for 30 min
	Direction of motion motor	selectable by ccw/cw mounting
	Direction of motion fail-safe	reversible with cw/ccw mounting
	Angle of rotation	95°
	Running Time (Motor)	25 s / 90°
	Running time fail-safe	<15 s
	Noise level, motor	70 dB(A)
	Noise level, fail-safe	73 dB(A)
	Position indication	Mechanical
Safety data	Degree of protection IEC/EN	IP40
	Degree of protection NEMA/UL	NEMA 1
	Housing	UL Enclosure Type 1
	Agency Listing	cULus acc. to UL60730-1A/-2-14, CAN/CSA E60730-1:02
	Quality Standard	ISO 9001, RoHS (EU-Directive 2011/65/EU)
	UL 2043 Compliant	Suitable for use in air plenums per Section 300.22(C) of the NEC and Section 602 of the IMC
	Ambient humidity	Max. 95% RH, non-condensing
	Ambient temperature	32...122°F [0...50°C]
	Storage temperature	-40...176°F [-40...80°C]
	Servicing	maintenance-free
Weight	Weight	6.8 lb [3.1 kg]
Materials	Housing material	galvanized steel

Technical data

Materials	Gears	steel, permanently lubricated

Safety notes

- * Neither UL nor Belimo require local over-current protection. The FSAF_A actuators draw higher peak current when driving against any type of stop. After 10 seconds current drops to the lower holding level. If used, this requires the value of a local fuse or breaker to be increased to avoid nuisance opening or tripping. A 2 A slow blow should be used for AC 24 V. A 0.5 A slow blow should be used for AC 120 V. A 0.25 A slow blow should be used for AC 230 V and a 0.3 A slow blow for AC 208 V.

Product features

Application

The FS series of spring-return actuators are designed for the operation of UL555 and UL555S listed fire/smoke dampers in ventilation and air-conditioning systems.

Operation

The actuator is mounted in its fail safe position with the damper blade(s) typically closed. Upon applying power, the actuator drives the damper to the open position. The internal spring is tensioned at the same time. If the power supply is interrupted, the spring moves the damper back to its fail-safe position.

Typical specification

All smoke and combination fire and smoke dampers shall be provided with Belimo FSTF, FSLF, FSNF, or FSAF series actuators. All substitutions must be approved before submission of bid. Damper and actuator shall have UL555S Listing for 250°F and/or 350°F. Actuator shall have been tested to UL2043 per requirements of IMC 602.2 and NEC 300.22 (c). Where position indication is required -S models with auxiliary switches shall be provided.

Accessories

Electrical accessories

Description	Type
Thermoelectric tripping device, Duct inside temperature 165°F	BAE165 US
Auxiliary switch 2x SPDT	S2A-F US

Mechanical accessories

Description	Type
Anti-rotation bracket, for AF / NF	AF-P
End stop indicator	IND-AFB
Shaft clamp reversible, for central mounting, for damper shafts ø12.7 / 19.0 / 25.4 mm	K7-2
Ball joint suitable for damper crank arm KH8	KG8
Actuator arm, for 3/4" shafts, clamping range ø10...22 mm, Slot width 8.2 mm	KH-AFB
	SH8
Wrench 0.32 in and 0.39 in [8 mm and 10 mm]	TOOL-06
Mounting bracket for AF..	ZG-100
Mounting bracket for AF / NF	ZG-101
Dual actuator mounting bracket.	ZG-102
Weather shield 13x8x6" [330x203x152 mm] (LxWxH)	ZS-100
Weather shield 406x213x102 mm [16x8-3/8x4"] (LxWxH)	ZS-150
Explosion proof housing 16x10x6.435" [406x254x164 mm] (LxWxH), UL and CSA, Class I, Zone 1&2, Groups B, C, D, (NEMA 7), Class III, Hazardous (classified) Locations	ZS-260
Weather shield 17-1/4x8-3/4x5-1/2" [438x222x140 mm] (LxWxH), NEMA 4X, with mounting brackets	ZS-300
	ZG-AFA108
Mounting kit for AF..	ZG-AFA
	ZG-DC1

Accessories

Description	Type
	ZG-DC2

Electrical installation

1 Provide overload protection and disconnect as required.
45 Actuators may be powered in parallel. Power consumption must be observed.
75 Ground present on some models.

Wiring diagrams

AC 230 V

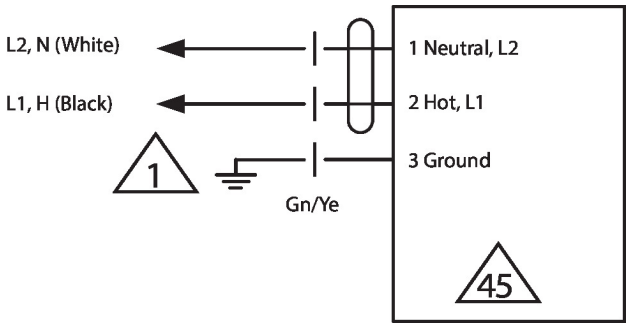

Typical containment damper control wiring

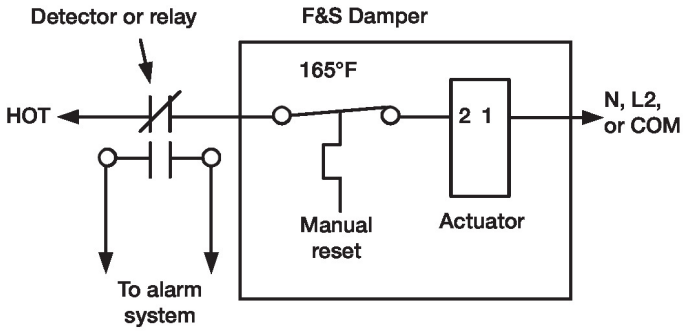

Typical smoke or fusible link damper wiring

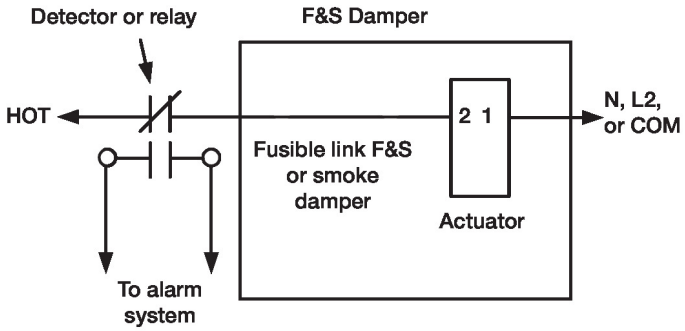

Electrical installation

Wiring diagrams

Parallel Actuator Wiring

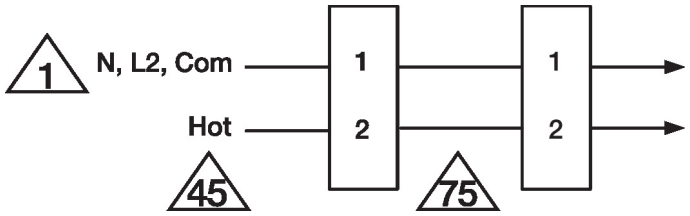
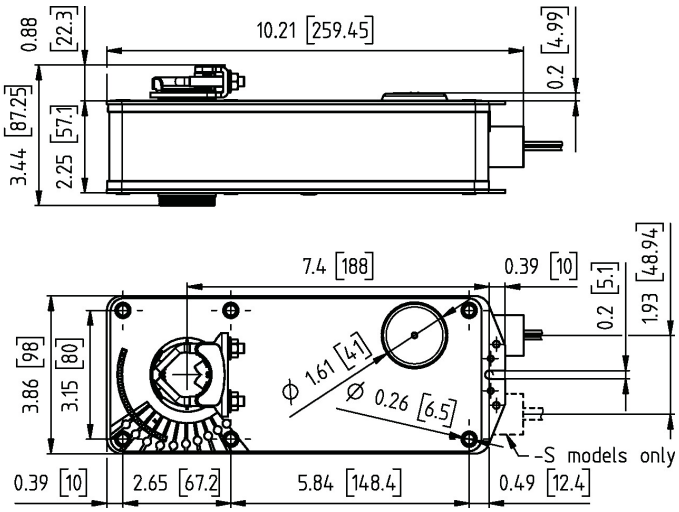
Dimensions