Gas monitor

Belimo gas monitors are factory calibrated and can monitor up to two gases simultaneously. All monitors feature audible and visual alarms and CAN bus communication, allowing for standalone operation and networking of up to 32 devices. Select models feature relays and analog outputs to control ventilation directly, as well as BACnet MS/TP allowing for integration into a BMS. All gas monitors are wired via a daisy chain and are backed by a five-year warranty.

5-year warranty

SAFETY SIGNALING US·CA E522421

Gas Monitor

Type Overview

Type	Measured values	Number of relays	Number of analog outputs	Communication
22G02-5A	CO	1	2	CAN bus, BACnet MS/TP
22G02-5B	CO	2	0	CAN bus, BACnet MS/TP
22G02-5C	CO	0	0	CAN bus

Technical data

Electrical Data	Nominal voltage	AC/DC 24 V
	Nominal voltage note	Please see the remarks section for nominal voltage details and nominal voltage range.
	Nominal voltage frequency	50/60 Hz
	Power consumption AC	5 VA
	Power consumption DC	1.7 W
	Cable entry	2 top, 2 bottom, 1 rear – 1/2" EMT
	Cable specification	Power cable: 18...20 AWG Communication cable: 22...24 AWG twisted pair, shielded jacketed, low capacitance Please see the remarks section for more information about cable size and polarity.
	Fuse	Thermal PTC, auto-reset
Data bus communication	Communication	CAN bus BACnet MS/TP

Functional Data	Application	Air
	Output signal active note	Analog outputs: 2...10 V or 4...20 mA, user selectable with jumper
	Output signal relay note	Relays: SPDT, 5A @ AC 125 V, non-inductive Please see Remarks section for relay rating.
	Mounting	Please see installation notes section for mounting height recommendations.
	Max. altitude	6562 ft [2000 m] above sea level
	Max. altitude note	Calibration verification is recommended above 2000 ft [610 m]
	Coverage area	Radius: 15 m [50 ft] Area: 700 m^2 [7500 ft^2] There can be no obstructions such as walls, elevators, stairs, shelving with solid fill, tool chests, etc. Otherwise the time weighted average (TWA) for the gas to reach the monitor will increase.
	Display	LCD with backlight showing gas type, gas concentration, alarm level status
	Alarm	Alarm level 1: Visual alarm (red LED) Alarm level 2: Visual alarm (red LED) Alarm level 3: Visual and audible alarm (flashing white strobe LED and horn) Horn: 80 dB @ 1 m [3.3ft]
	Warm-up time	5 minutes
Measuring Data	Measured values	CO
Specification gas	Sensing element technology	Electro-chemical
	Measuring range	CO: 0...250 ppm
	Accuracy	CO: ±3% FS from 0...75 ppm @ 23.5°C [74°F] FS: Full scale of the measuring range Please see the remarks section for more information about the accuracy of CO sensors.
	Measurement repeatability	<+3% CO equivalent
	Long term stability	CO: <5% per year
	Calibration	Non-interactive zero and span Sensor modules are required to be calibrated annually.
	Typical response time	<30 s (T90)
Specification Temperature	Measuring range	-4...122°F [-20...50°C] Please see the remarks section for the application notice for temperature sensor
	Accuracy temperature passive	±7°C @ 23.5°C [13°F @ 74°F] Please see the Remarks section under Application Notice for more information about temperature accuracy
Safety Data	Degree of protection IEC/EN	IP44
	Degree of protection NEMA/UL	NEMA 2

Technical data

Safety Data	Agency Listing	cULus listed to UL2075, ULC-S588 cCSAus listed to C22.2 No. 61010-1-12, UL Std. No. 61010-1 (3rd Edition), harmonized under IEC/EN 61010-1 BTL listed No. BTL-30001
	Pollution degree	2
	Ambient humidity	15...90% RH continuous, 0...99% RH intermittent, non-condensing
	Ambient temperature	-4...122°F [-20...50°C]
Materials	Housing	UL94 5VA

Remarks

Nominal voltage details

All Belimo gas monitors, communication modules, and relay units can be powered by AC/DC 24 V. Under CSA/UL 61010-1 all gas monitors and communication modules are rated to AC 24 V only. Under ULC-S588 and UL 2075, all vehicle emissions gas monitors (CO, NO_2, CO + NO_2) are rated to AC/DC 24 V.

Nominal voltage range

All Belimo gas monitors, communication modules, and relay units have a nominal voltage range of AC 17...28/DC 21...38 V (not UL or CSA-tested), AC/DC 20.4...26.4 V (UL-tested).

Power cable size and polarity

Terminal blocks can accommodate one 14...20 AWG wire, or two 18...20 AWG wires in the same terminal. Please take cable and transformer size into account to provide adequate voltage. Maintain the same polarity between devices at full power (AC/DC 24 V).

Communication cable size and polarity

CAN bus and BACnet MS/TP communication cables should be 22...24 AWG, twisted-pair, shield-jacketed, low-capacitance. Please consider the CAN bus baud rate (programmable setting No. 68) and BACnet the MS/TP baud rate (programmable setting No. 48) to provide working communications. For all communication wiring, maintain the same polarity and baud rate between all devices on the network.

Relay rating

All relays used in Belimo gas monitors, communication modules, and relay units are rated for: SPDT, 5 A @ AC 125 V, non-inductive (UL/CSA tested), and SPDT, 4 A @ DC 24 V, non-inductive (not UL/CSA tested).

Application notice for temperature sensor

All Belimo gas monitors and communication modules come with an internal temperature sensor. The purpose of this temperature sensor is to protect an enclosed parking garage from overheating or freezing, by activating relay 1. When using this feature, it is recommended to calibrate the temperature sensor to the ambient temperature (programmable setting No. 50), after the gas monitor has been powered for 24 hours. For freeze protection, it is recommended to set the temperature set point (programmable settings No. 55) at or over 40 °F [4°C].

Please note that this temperature sensor is located on the gas monitor printed circuit board (PCB). Therefore, it needs to be calibrated after 24 hours of normal operation to offset the heat generated by the PCB. It is not intended to be used as a room temperature sensor because of the limited accuracy and slow response time caused by its location on the PCB. This temperature sensor accuracy of ±13°F @ 74°F [7°C @ 23.5°C] has not been certified by UL.

Accuracy for gas monitors

CO and NO_2 sensor accuracies are not certified by UL. Both accuracies were internally tested and validated in an environmental chamber and compared to a high-accuracy reference device (analyzer).

Application notice for gas sensors

Intended applications include residential, light commercial, and light industrial. Non-intended applications include heavy commercial, heavy industrial, or hazardous locations.

Vehicle emissions (CO, NO2):

Enclosed parking garages, loading docks, automotive maintenance facilities, truck maintenance facilities, fire stations, ambulance bays, boiler rooms, warehouses

Installation notes

Mounting height recommendations

CO mounting height recommendations in an enclosed parking garage are the same regardless of the types of vehicles being stored and the height of the parking garage.

It is recommended to place a CO gas monitor at 0.9...2.1 m [3...7 ft] above the floor. The ideal location for monitoring CO is 1.5 m [5 ft]. When the monitor is located at the correct height, it is less likely to be damaged by passing cars and trucks, and it is in a good location to be serviced.

Accessories

Replacement sensor modules

Description	Type
Sensor module CO (Carbon Monoxide), 0...250 ppm,	R-G02

Electrical accessories

Description	Type
Communication module, CAN bus, BACnet MS/TP, 1 relay, 2 analog outputs	C-22G-5A
Communication module, CAN bus, BACnet MS/TP, 2 relays	C-22G-5B
Communication module, CAN bus	C-22G-5C
Relay unit, CAN bus, 4 relays	C-22G-50
High-low mounting kit	A-22G-A14
External visual alarm	A-22G-A15
External audible alarm	A-22G-A16
Transformer, 50 VA	A-22G-A50
Transformer, 100 VA	A-22G-A100

Mechanical accessories

Description	Type
Splash proof enclosure	A-22G-A12
Duct mount enclosure	A-22G-A13
Calibration kit,	A-22G-A22

Wiring Diagram

A Model Wiring

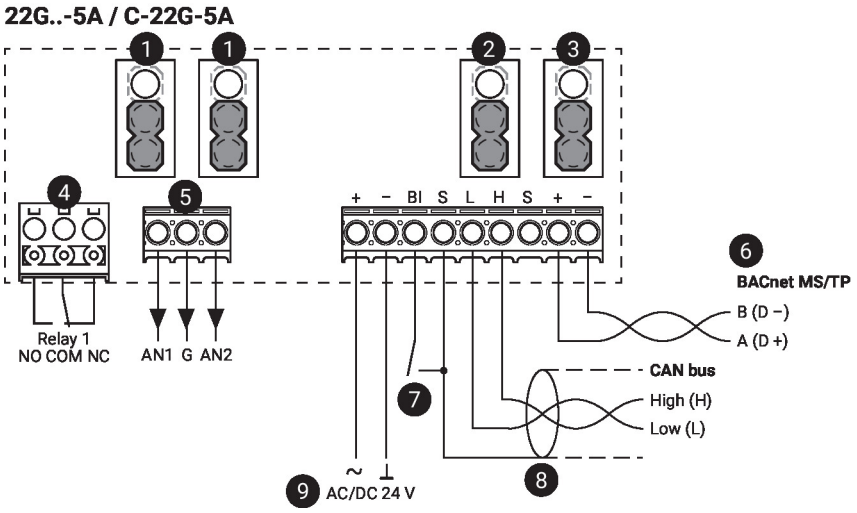

B Model Wiring

22G..-5B / C-22G-5B

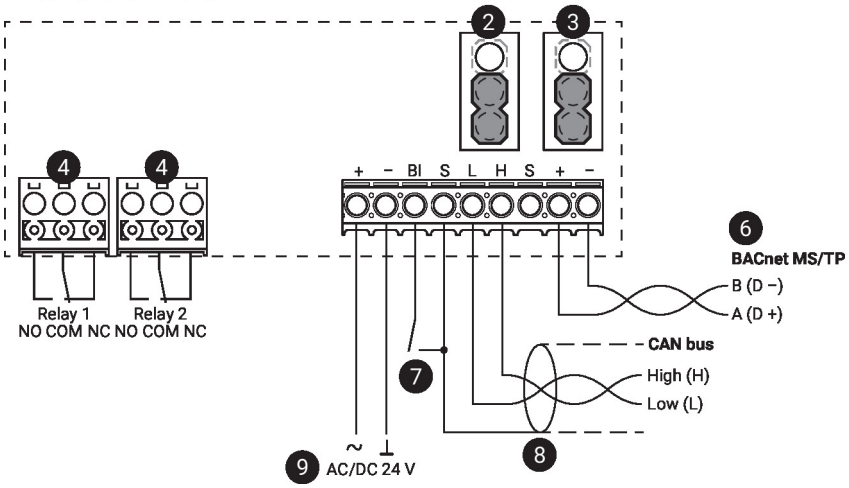

C Model Wiring

22G..-5C / C-22G-5C

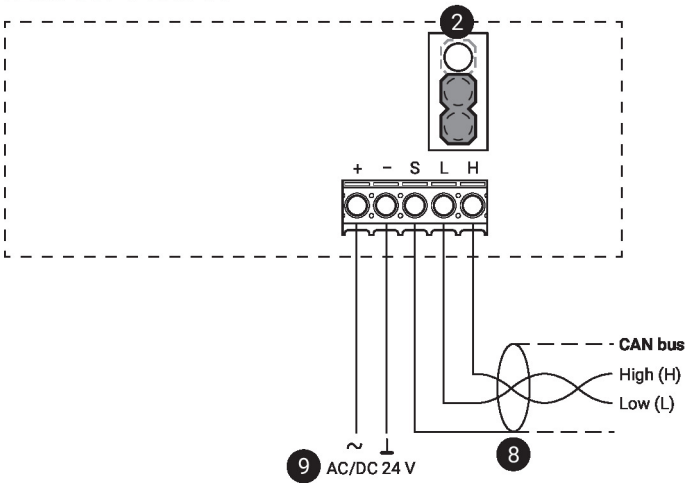

1. **Analog outputs**
   Down position: 2....10 V (factory setting)
   Up position: 4...20 mA
2. **End of line (EOL) jumper**: CAN bus
   Down position: Termination OFF (factory setting)
   Up position: Termination ON (first and last unit only should have this jumper in the up position)
3. **End of line (EOL) jumper**: MS/TP
   Down position: Termination OFF (factory setting)
   Up position: Termination ON (first and last unit only should have this jumper in the up position)
4. **Relay output**
5. **Analog output**
6. **Shield connected at the first unit only, at others only looped through**
7. **Binary input to limit switch**
8. **Shield connected at the first unit only, at others only looped through**
9. **No connection to the ground**

Wiring CAN bus

CAN bus Wiring

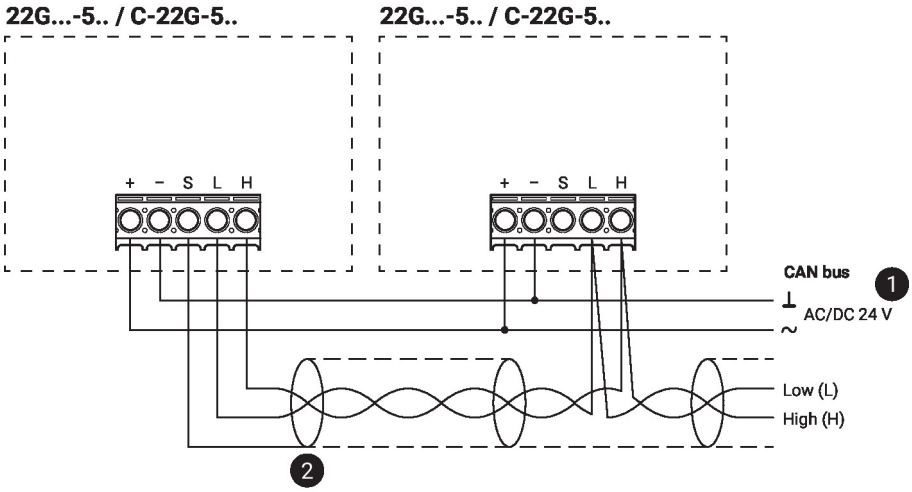

1. No connection to the ground
2. Shield connected at the first unit only, at others only looped through

Wiring Diagram

Wiring RS485 BACnet MS/TP BACnet MS/ TP Wiring

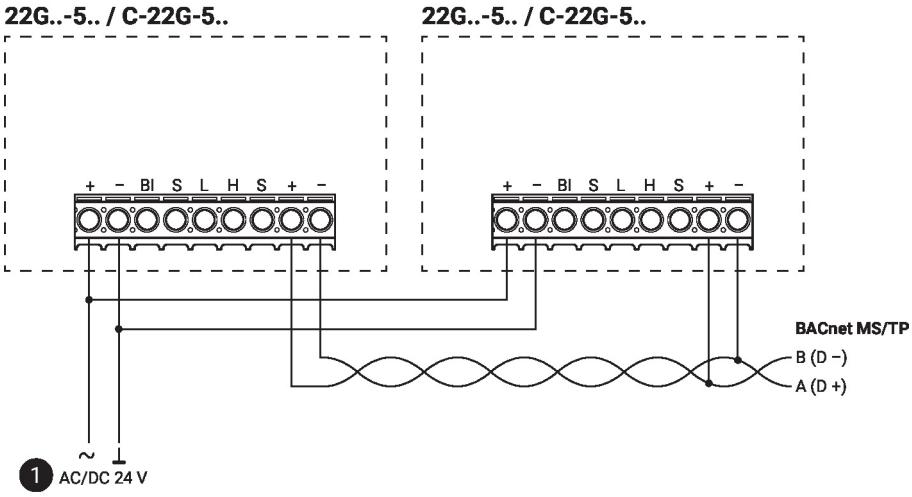

1 No connection to the ground

Dimensions

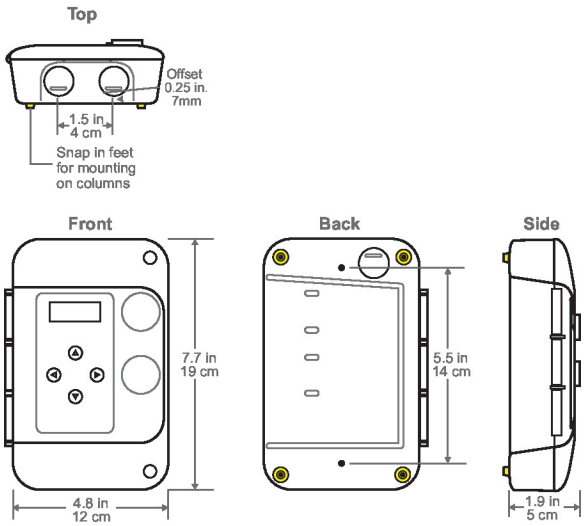

Type	Weight
22G02-5A	0.95 lb [0.43 kg]
22G02-5B	0.95 lb [0.43 kg]
22G02-5C	0.95 lb [0.43 kg]

Further documentation

- Installation instructions
- Operating instructions