Butterfly Valve with Lug types

- Disc 304 stainless steel
- Bubble tight shut-off
- Resilient seat
- Valve face-to-face dimensions comply with API 609 & MSS-SP-67
- Completely assembled and tested, ready for installation

5-year warranty

Type overview

Type	DN
F6150HD	150

Technical data

Functional data	Valve size [mm]	6" [150]
	Fluid	chilled or hot water, up to 60% glycol
	Fluid Temp Range (water)	-22...250°F [-30...120°C]
	Body Pressure Rating	ANSI Class Consistent with 125, 232 psi CWP
	Close-off pressure Δps	200 psi
	Flow characteristic	modified equal percentage
	Leakage rate	0% leakage, leakage rateA
	Pipe connection	Flange for use with ASME/ANSI class 125/150
	Servicing	maintenance-free
	Flow Pattern	2-way
	Controllable flow range	90° rotation
	Cv	1579
	Maximum Velocity	12 FPS
	Lug threads	3/4-10 UNC
Materials	Valve body	Ductile cast iron ASTM A536
	Body finish	epoxy powder coating (blue RAL 5002)
	Stem	416 stainless steel
	Stem seal	EPDM (lubricated)
	Seat	EPDM
	Bearing	RPTFE
	Disc	304 stainless steel
Suitable actuators	Non Fail-Safe	PRB(X)
	Electrical fail-safe	PKRB(X)

Product features

Flow/Mounting details

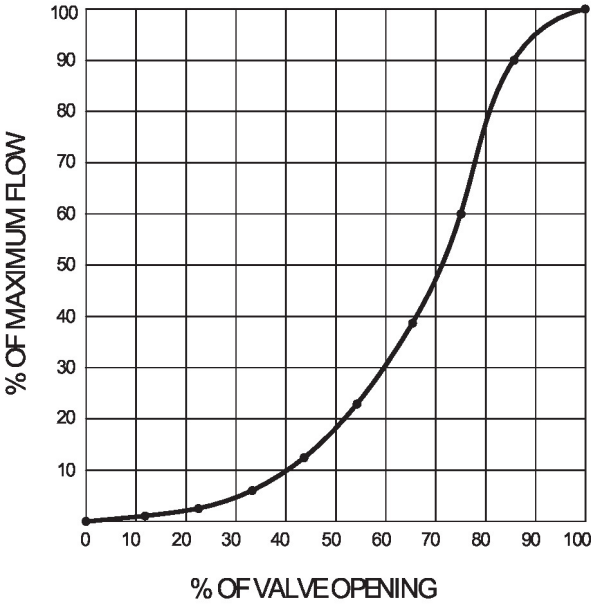

Dimensions

Type	DN	Weight
F6150HD	150	28 lb [13 kg]

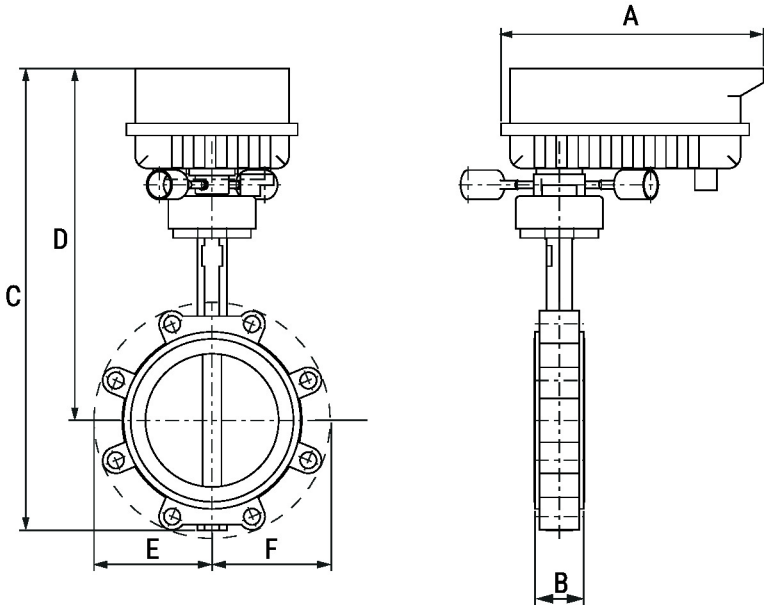

Valve with PRB(X) Actuator

A	B	C	D	E	F	Number of Bolt Holes
12.0" [304]	2.2" [56]	21.0" [533]	16.0" [406]	5.4" [137]	5.4" [137]	8

Dimensions

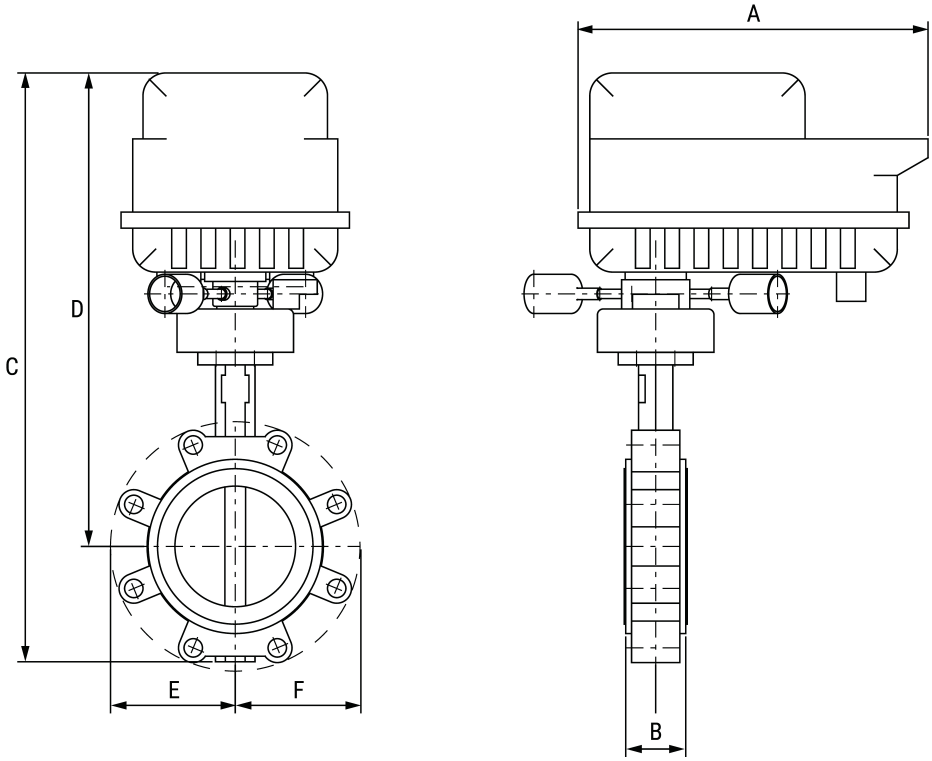

Valve with PKR Actuator

A	B	C	D	E	F	Number of Bolt Holes
12.0" [304]	2.2" [56]	23.3" [591]	18.3" [464]	5.4" [137]	5.4" [137]	8

On/Off, Floating point, Non fail-safe, 24...240 V

5-year warranty

Technical data

Electrical data	Nominal voltage	AC 24...240 V / DC 24...125 V
	Nominal voltage frequency	50/60 Hz
	Nominal voltage range	AC 19.2...264 V / DC 19.2...137.5 V
	Power consumption in operation	20 W
	Power consumption in rest position	7 W
	Transformer sizing	with 24 V 20 VA / with 240 V 52 VA
	Auxiliary switch	2x SPDT, 1 mA...3 A (0.5 A inductive), DC 5 V...AC 250 V (II, reinforced insulation), 1x 10° / 1x 0...90° (default setting 85°)
	Switching capacity auxiliary switch	1 mA...3 A (0.5 A inductive), DC 5 V...AC 250 V (II, reinforced insulation)
	Electrical Connection	Terminal blocks, (PE) Ground-Screw
	Overload Protection	electronic thoughout 0...90° rotation
Functional data	Direction of motion motor	reversible with app
	Manual override	7 mm hex crank, supplied
	Angle of rotation	90°
	Running Time (Motor)	35 s / 90°
	Noise level, motor	68 dB(A)
	Position indication	integral pointer
Safety data	Power source UL	Class 2 Supply
	Degree of protection IEC/EN	IP66/67
	Degree of protection NEMA/UL	NEMA 4X
	Enclosure	UL Enclosure Type 4X
	Agency Listing	cULus acc. to UL60730-1A/-2-14, CAN/CSA E60730-1:02, CE acc. to 2014/30/EU and 2014/35/EU
	Quality Standard	ISO 9001
	Ambient humidity	Max. 100% RH
	Ambient temperature	-22...122°F [-30...50°C]
	Servicing	maintenance-free
Weight	Weight	6.8 lb [3.1 kg]

Technical data

Materials	Housing material	Die cast aluminium and plastic casing

Safety notes

- For maintenance work, the correct valve position must be set via the control signal. Additionally, the actuator must be disconnected from the power source. The hand crank and manual override shall not be used as a safety measure to maintain the valve position.

Product features

Application

PR Series valve actuators are designed with an integrated linkage and visual position indicators. For outdoor applications, the installed valve must be mounted with the actuator at or above horizontal. For indoor applications the actuator can be in any location including directly under the valve.

Operation

The PR series actuator provides 90° of rotation and a visual indicator shows the position of the valve. The PR Series actuator uses a low power consumption brushless DC motor and is electronically protected against overload. A universal power supply is furnished to connect supply voltage in the range of AC 24...240 V and DC 24...125 V. Included is a smart heater with thermostat to eliminate condensation. Two auxiliary switches are provided; one set at 10° open and the other is field adjustable. Running time is field adjustable from 30...120 seconds by using the Near Field Communication (NFC) app and a smart phone.

†Use 60°C/75°C copper wire size range 12...28 AWG, stranded or solid. Use flexible metal conduit. Push the listed conduit fitting device over the actuator's cable to butt against the enclosure. Screw in conduit connector. Jacket the actuators input wiring with listed flexible conduit. Properly terminate the conduit in a suitable junction box. Rated impulse Voltage 4000 V. Type of action 1. Control pollution degree 3.

Accessories

Mechanical accessories

Description	Type
Hand crank for PR, PKR, PM	ZG-HND PR

Electrical installation

Meets cULus requirements without the need of an electrical ground connection.

UP Universal Power Supply (UP) models can be supplied with AC 24...240 V, or DC 24...125 V.

Disconnect power.

1 Provide overload protection and disconnect as required.

4 Two built-in auxiliary switches (2x SPDT), for end position indication, interlock control, fan startup, etc.

46 Actuators may be controlled in parallel. Current draw and input impedance must be observed.

Warning! Live electrical components!

During installation, testing, servicing and troubleshooting of this product, it may be necessary to work with live electrical components. Have a qualified licensed electrician or other individual who has been properly trained in handling live electrical components perform these tasks. Failure to follow all electrical safety precautions when exposed to live electrical components could result in death or serious injury.

Electrical installation

Wiring diagrams

On/Off

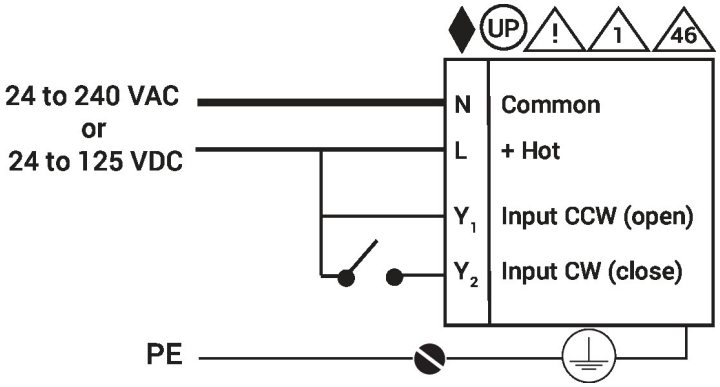

On/Off

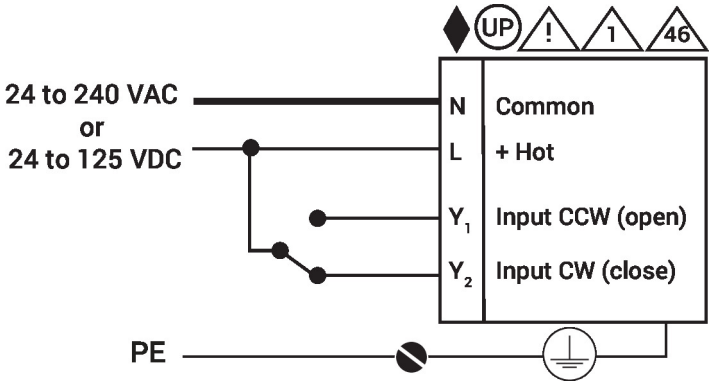

Floating Point

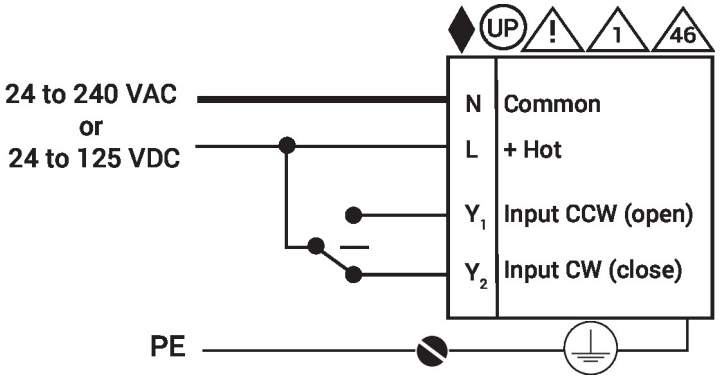

Auxiliary Switches

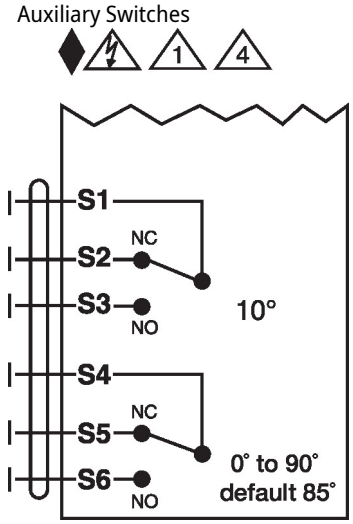
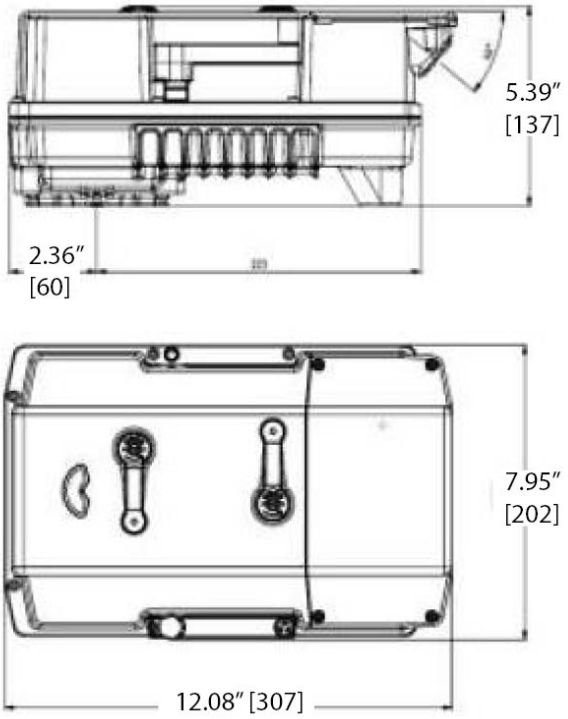
Dimensions