Butterfly Valve with Lug types

- Disc 304 stainless steel
- Bubble tight shut-off
- Resilient seat
- Valve face-to-face dimensions comply with API 609 & MSS-SP-67
- Completely assembled and tested, ready for installation

5-year warranty

## Type overview

| Type | DN |
|---|---|
| F6200L | 200 |

## Technical data

| | | |
|---|---|---|
| **Functional data** | Valve size [mm] | 8" [200] |
| | Fluid | chilled or hot water, up to 60% glycol |
| | Fluid Temp Range (water) | -22...250°F [-30...120°C] |
| | Body Pressure Rating | ANSI Class Consistent with 125, 232 psi CWP |
| | Close-off pressure Δps | 200 psi |
| | Flow characteristic | modified equal percentage |
| | Servicing | maintenance-free |
| | Flow Pattern | 2-way |
| | Leakage rate | 0% |
| | Controllable flow range | 90° rotation |
| | Cv | 3136 |
| | Maximum Velocity | 12 FPS |
| | Lug threads | 3/4-10 UNC |
| **Materials** | Valve body | Ductile cast iron ASTM A536 |
| | Body finish | polyester powder coated |
| | Stem | 420 stainless steel |
| | Seat | EPDM |
| | Pipe connection | for use with ANSI class 125/150 flanges |
| | Bearing | Steel, PTFE, Bronze |
| | Disc | 304 stainless steel |
| | Gear operator materials | Gears - hardened steel |
| **Suitable actuators** | Non-Spring | PRB(X) |
| | Electrical fail-safe | PKRB(X) |

## Product features

Flow/Mounting details

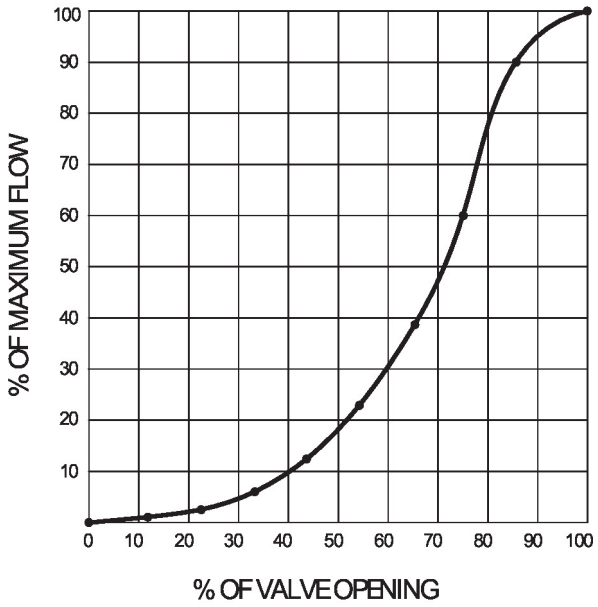


## Dimensions

| Type | DN | Weight |
|---|---|---|
| F6200L | 200 | 34 lb [17 kg] |

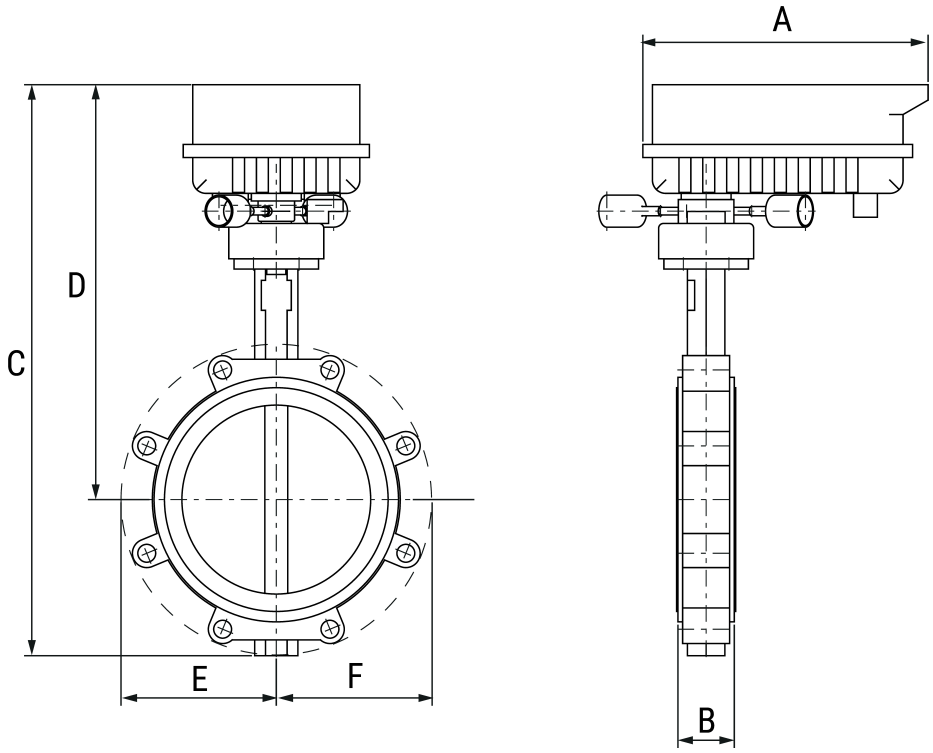


Valve with PRB(X) Actuator

| A | B | C | D | E | F | Number of Bolt Holes |
|---|---|---|---|---|---|---|
| 12.0" [304] | 2.5" [63] | 26.1" [664] | 19.6" [498] | 6.5" [165] | 6.5" [165] | 8 |

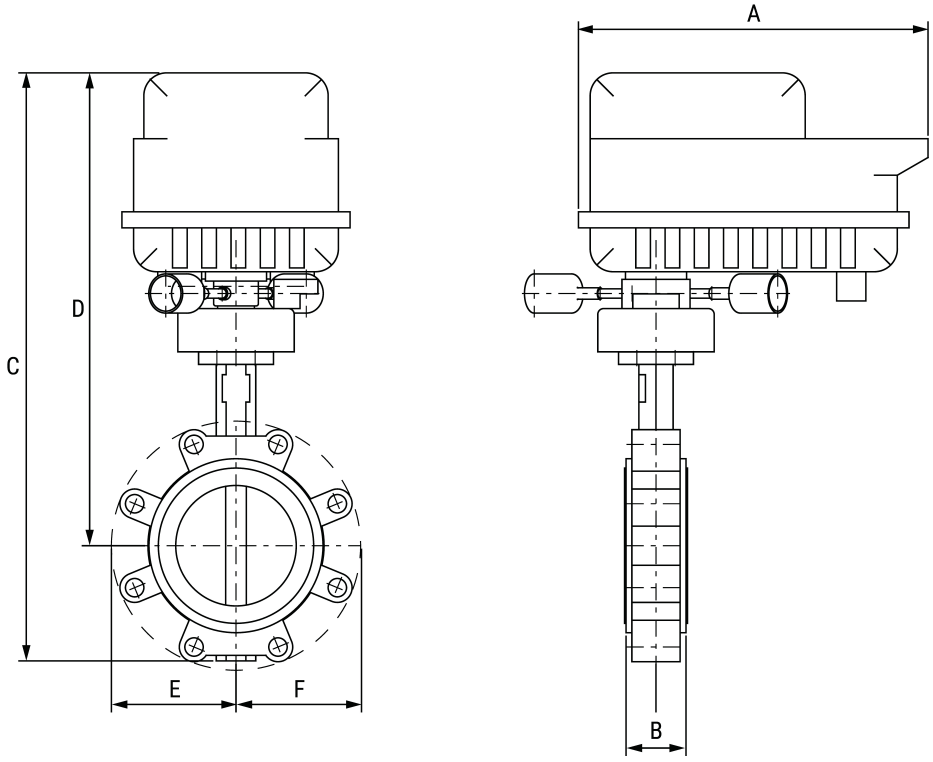


Valve with PKR Actuator

| A | B | C | D | E | F | Number of Bolt Holes |
|---|---|---|---|---|---|---|
| 12.0" [304] | 2.4" [60] | 26.1" [664] | 19.6" [498] | 6.5" [165] | 6.5" [165] | 8 |

MFT/programmable, Non fail-safe, 24...240 V

5-year warranty

## Technical data

| | | |
|---|---|---|
| **Electrical data** | Nominal voltage | AC 24...240 V / DC 24...125 V |
| | Nominal voltage frequency | 50/60 Hz |
| | Nominal voltage range | AC 19.2...264 V / DC 19.2...137.5 V |
| | Power consumption in operation | 20 W |
| | Power consumption in rest position | 7 W |
| | Transformer sizing | with 24 V 20 VA / with 240 V 52 VA |
| | Auxiliary switch | 2x SPDT, 1 mA...3 A (0.5 A inductive), DC 5 V...AC 250 V (II, reinforced insulation), 1x 10° / 1x 0...90° (default setting 85°) |
| | Switching capacity auxiliary switch | 1 mA...3 A (0.5 A inductive), DC 5 V...AC 250 V (II, reinforced insulation) |
| | Electrical Connection | Terminal blocks, (PE) Ground-Screw |
| | Overload Protection | electronic thoughout 0...90° rotation |
| **Data bus communication** | Communicative control | BACnet MS/TP<br>Modbus RTU<br>MP-Bus |
| **Functional data** | Operating range Y | 2...10 V |
| | Operating range Y note | 4...20 mA |
| | Input impedance | 100 kΩ for 2...10 V (0.1 mA), 500 Ω for 4...20 mA, 1500 Ω for On/Off |
| | Operating range Y variable | Start point 0.5...30 V<br>End point 2.5...32 V |
| | Operating modes optional | variable (VDC, on/off, floating point) |
| | Position feedback U | 2...10 V |
| | Position feedback U note | Max. 0.5 mA |
| | Position feedback U variable | VDC variable |
| | Direction of motion motor | reversible with app |
| | Manual override | 7 mm hex crank, supplied |
| | Angle of rotation | 90° |
| | Running Time (Motor) | 35 s / 90° |
| | Running time motor variable | 30...120 s |
| | Noise level, motor | 68 dB(A) |
| | Position indication | integral pointer |

## Technical data

| | | |
|---|---|---|
| **Safety data** | Power source UL | Class 2 Supply |
| | Degree of protection IEC/EN | IP66/67 |
| | Degree of protection NEMA/UL | NEMA 4X |
| | Enclosure | UL Enclosure Type 4X |
| | Agency Listing | cULus acc. to UL60730-1A/-2-14, CAN/CSA E60730-1:02, CE acc. to 2014/30/EU and 2014/35/EU |
| | Quality Standard | ISO 9001 |
| | Ambient humidity | Max. 100% RH |
| | Ambient temperature | -22...122°F [-30...50°C] |
| | Storage temperature | -40...176°F [-40...80°C] |
| | Servicing | maintenance-free |
| **Weight** | Weight | 14 lb [6.2 kg] |
| **Materials** | Housing material | Die cast aluminium and plastic casing |

## Safety notes

- For maintenance work, the correct valve position must be set via the control signal. Additionally, the actuator must be disconnected from the power source. The hand crank and manual override shall not be used as a safety measure to maintain the valve position.

## Product features

**Application**

PR Series valve actuators are designed with an integrated linkage and visual position indicators. For outdoor applications, the installed valve must be mounted with the actuator at or above horizontal. For indoor applications the actuator can be in any location including directly under the valve.

**Operation**

The PR series actuator provides 90° of rotation and a visual indicator shows the position of the valve. The PR Series actuator uses a low power consumption brushless DC motor and is electronically protected against overload. A universal power supply is furnished to connect supply voltage in the range of AC 24...240 V and DC 24...125 V. Included is a smart heater with thermostat to eliminate condensation. Two auxiliary switches are provided; one set at 10° open and the other is field adjustable. Running time is field adjustable from 30...120 seconds by using the Near Field Communication (NFC) app and a smart phone.

†Use 60°C/75°C copper wire size range 12...28 AWG, stranded or solid. Use flexible metal conduit. Push the listed conduit fitting device over the actuator's cable to butt against the enclosure. Screw in conduit connector. Jacket the actuators input wiring with listed flexible conduit. Properly terminate the conduit in a suitable junction box. Rated impulse Voltage 4000 V. Type of action 1. Control pollution degree 3.

## Accessories

| | Description | Type |
|---|---|---|
| **Gateways** | Gateway MP to BACnet MS/TP | UK24BAC |
| | Gateway MP to Modbus RTU | UK24MOD |
| | Gateway MP to LonWorks | UK24LON |

| | Description | Type |
|---|---|---|
| **Electrical accessories** | Service tool, with ZIP-USB function, for programmable and communicative Belimo actuators, VAV controller and HVAC performance devices | ZTH US |

## Accessories

| Mechanical accessories | Description | Type |
|---|---|---|
| | Hand crank for PR, PKR, PM | ZG-HND PR |

| Tools | Description | Type |
|---|---|---|
| | Connecting cable 10 ft [3 m], A: RJ11 6/4 ZTH EU, B: 3-pin Weidmüller and supply connection | ZK4-GEN |
| | Service tool, with ZIP-USB function, for programmable and communicative Belimo actuators, VAV controller and HVAC performance devices | ZTH US |

| Sensors | Description | Type |
|---|---|---|
| | Duct/Immersion sensor Temperature 6" [150 mm] x 0.24" [6 mm] Pt1000 | 01DT-5BN |
| | Duct/Immersion sensor Temperature 2" [50 mm] x 0.24" [6 mm] Pt1000 | 01DT-5BH |
| | Duct/Immersion sensor Temperature 4" [100 mm] x 0.24" [6 mm] Pt1000 | 01DT-5BL |
| | Duct/Immersion sensor Temperature 8" [200 mm] x 0.24" [6 mm] Pt1000 | 01DT-5BP |
| | Duct/Immersion sensor Temperature 18" [450 mm] x 0.24" [6 mm] Pt1000 | 01DT-5BT |
| | Duct/Immersion sensor Temperature 2" [50 mm] x 0.24" [6 mm] Ni1000 (JCI) | 01DT-5EH |
| | Duct/Immersion sensor Temperature 4" [100 mm] x 0.24" [6 mm] Ni1000 (JCI) | 01DT-5EL |
| | Duct/Immersion sensor Temperature 6" [150 mm] x 0.24" [6 mm] Ni1000 (JCI) | 01DT-5EN |
| | Duct/Immersion sensor Temperature 8" [200 mm] x 0.24" [6 mm] Ni1000 (JCI) | 01DT-5EP |
| | Duct/Immersion sensor Temperature 12" [300 mm] x 0.24" [6 mm] Pt1000 | 01DT-5BR |
| | Duct/Immersion sensor Temperature 12" [300 mm] x 0.24" [6 mm] Ni1000 (JCI) | 01DT-5ER |
| | Duct/Immersion sensor Temperature 18" [450 mm] x 0.24" [6 mm] Ni1000 (JCI) | 01DT-5ET |

## Electrical installation

Meets cULus requirements without the need of an electrical ground connection.

UP Universal Power Supply (UP) models can be supplied with 24...240 V.

Disconnect power.

1 Provide overload protection and disconnect as required.

4 Two built-in auxiliary switches (2x SPDT), for end position indication, interlock control, fan startup, etc.

5 Only connect common to negative (-) leg of control circuits.

46 Actuators may be controlled in parallel. Current draw and input impedance must be observed.

**Warning! Live electrical components!**
During installation, testing, servicing and troubleshooting of this product, it may be necessary to work with live electrical components. Have a qualified licensed electrician or other individual who has been properly trained in handling live electrical components perform these tasks. Failure to follow all electrical safety precautions when exposed to live electrical components could result in death or serious injury.

**Wiring diagrams**

On/Off

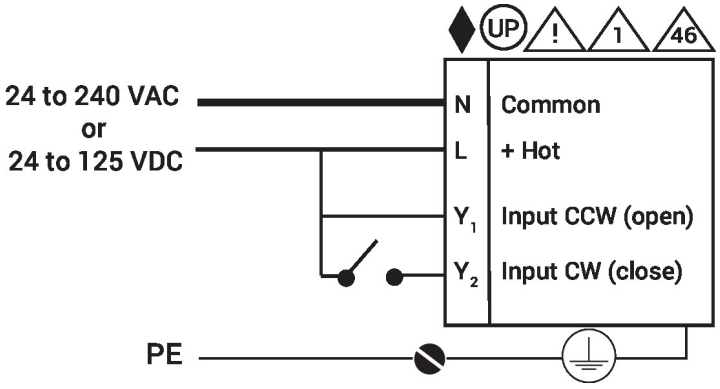


On/Off

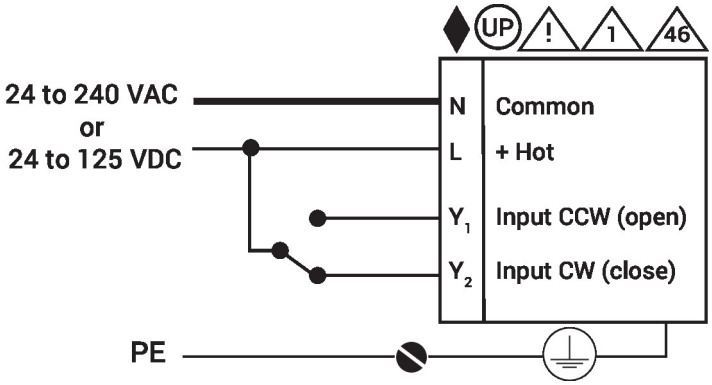


BACnet

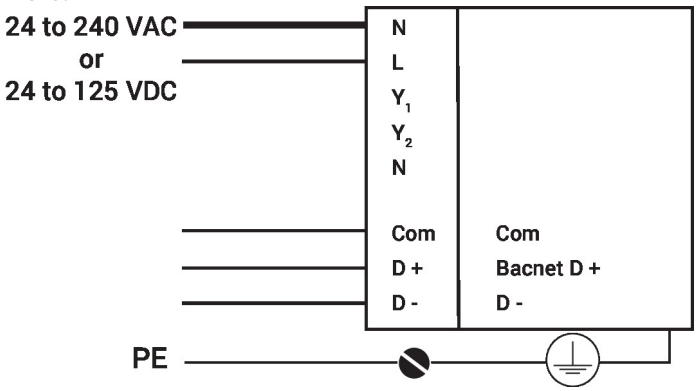


Modulating

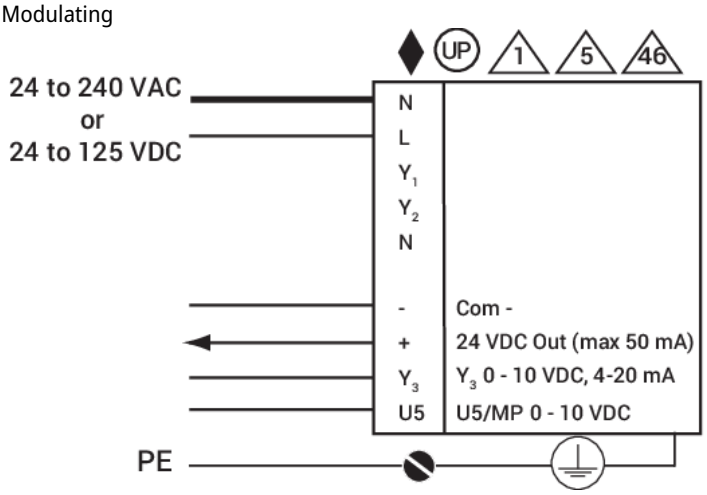

## Electrical installation

**Wiring diagrams**

Floating Point

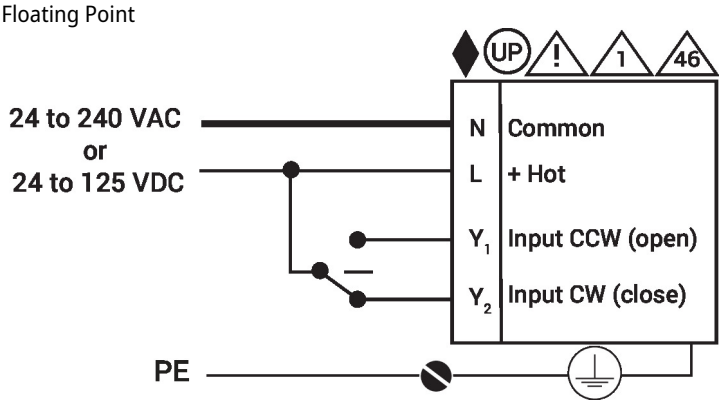


Temperature Sensors

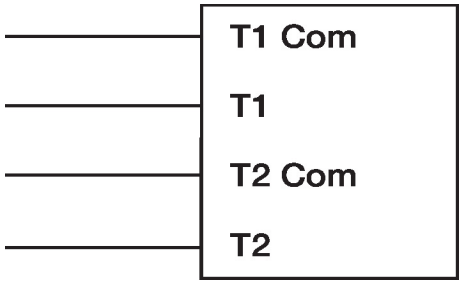

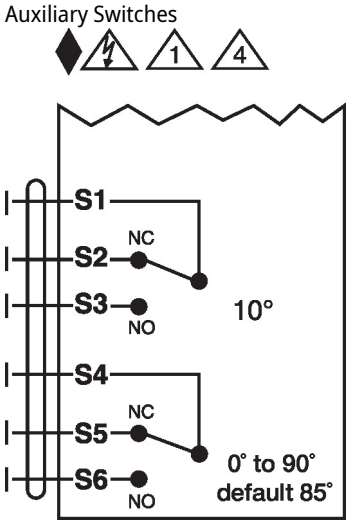
Auxiliary Switches