Butterfly Valve with Lug types

- Disc 304 stainless steel
- Bubble tight shut-off
- Resilient seat
- Valve face-to-face dimensions comply with API 609 & MSS-SP-67
- Completely assembled and tested, ready for installation

5
5-year warranty

Type overview

Type	DN
F650HD	50

Technical data

Functional data	Valve size [mm]	2" [50]
	Fluid	chilled or hot water, up to 60% glycol
	Fluid Temp Range (water)	-22...250°F [-30...120°C]
	Body Pressure Rating	ANSI Class Consistent with 125, 232 psi CWP
	Close-off pressure Δps	200 psi
	Flow characteristic	modified equal percentage
	Leakage rate	0% leakage, leakage rateA
	Pipe connection	Flange for use with ASME/ANSI class 125/150
	Servicing	maintenance-free
	Flow Pattern	2-way
	Controllable flow range	90° rotation
	Cv	115
	Maximum Velocity	12 FPS
	Lug threads	5/8-11 UNC
Materials	Valve body	Ductile cast iron ASTM A536
	Body finish	epoxy powder coating (blue RAL 5002)
	Stem	416 stainless steel
	Stem seal	EPDM (lubricated)
	Seat	EPDM
	Bearing	RPTFE
	Disc	304 stainless steel
Suitable actuators	Non Fail-Safe	ARB(X) GRB(X)
	Spring	AFRB(X)

Product features

Flow/Mounting details

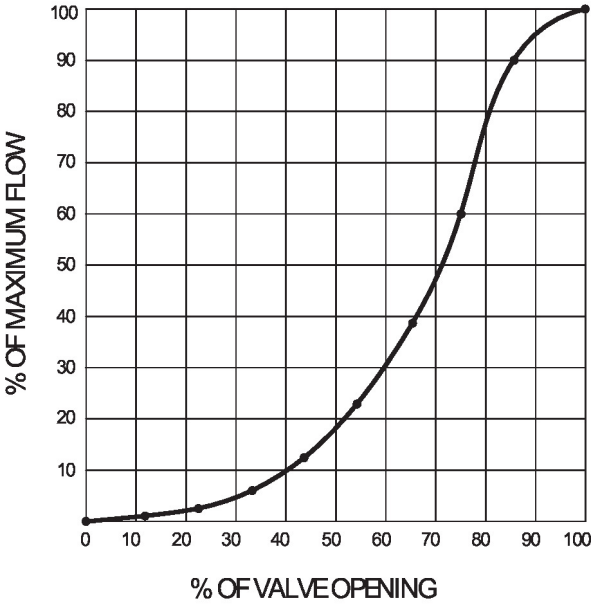

Dimensions

Type	DN	Weight
F650HD	50	12 lb [5.3 kg]

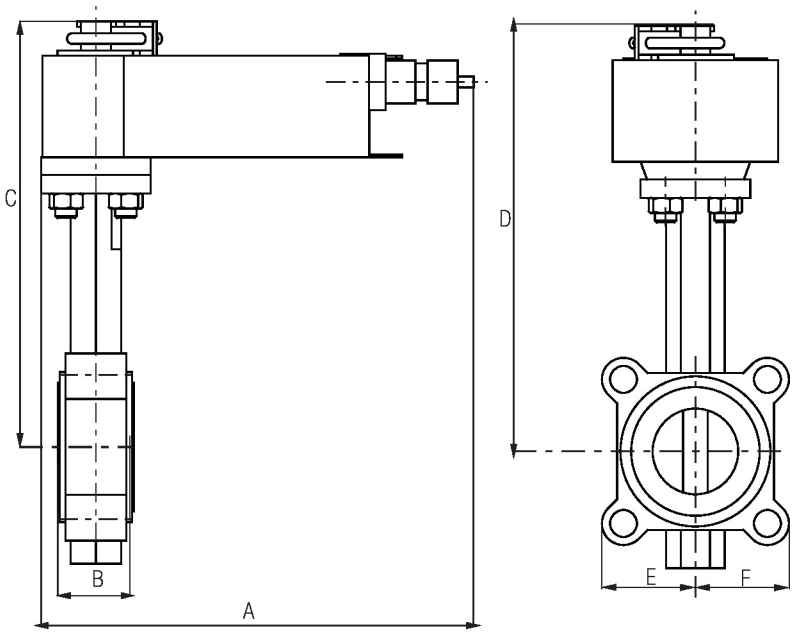

Valve with AFR Actuator

A	B	C	D	E	F	Number of Bolt Holes
10.1" [257]	1.8" [45]	12.3" [312]	9.5" [241]	2.9" [73]	2.9" [73]	4

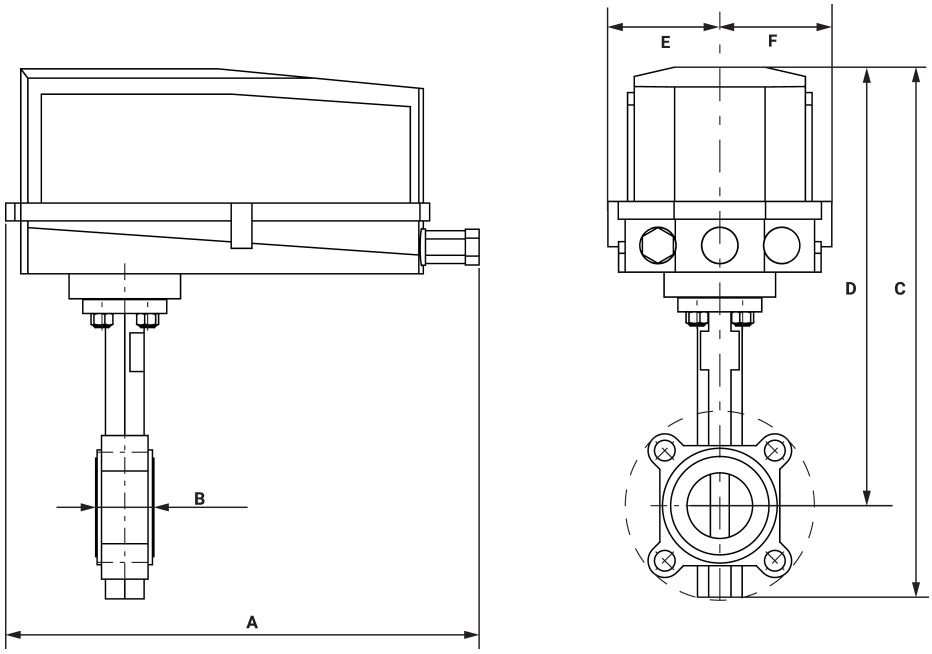

Valve with AF/GR N4 Actuator

A	B	C	D	E	F	Number of Bolt Holes
14.5" [368]	1.8" [45]	16.1" [409]	13.3" [338]	3.4" [86]	3.4" [86]	4

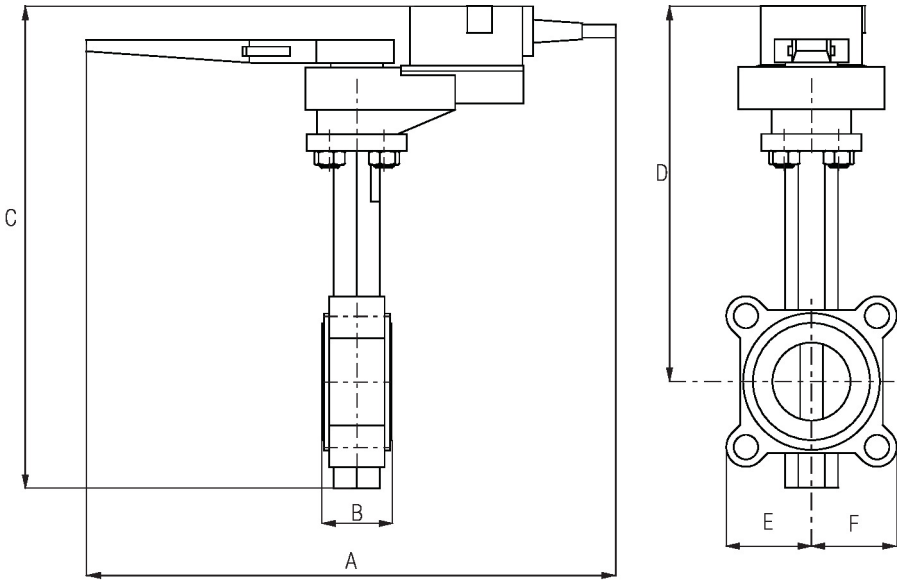

Valve with ARB/GRB Actuator

A	B	C	D	E	F	Number of Bolt Holes
14.6" [370]	1.8" [45]	12.4" [314]	9.7" [246]	2.9" [73]	2.9" [73]	4

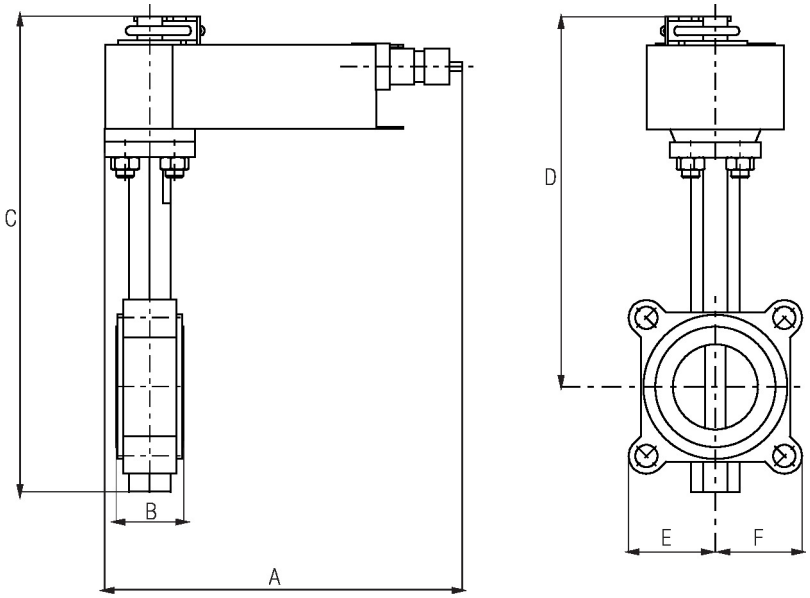

Valve with AFB/AFX Actuator

A	B	C	D	E	F	Number of Bolt Holes
10.1" [257]	1.8" [45]	15.1" [384]	12.4" [315]	2.9" [73]	2.9" [73]	4

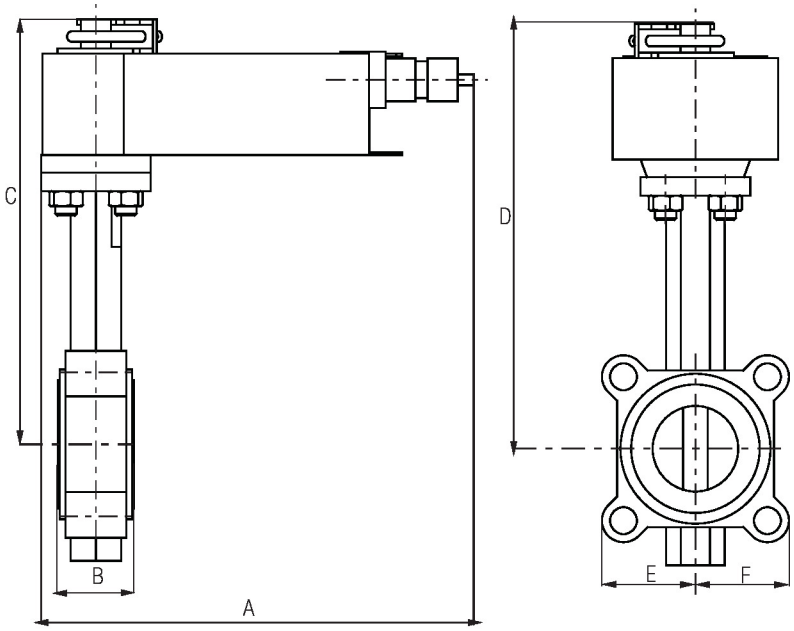

Valve with AMB/AMX Actuator

A	B	C	D	E	F	Number of Bolt Holes
8.3" [211]	1.8" [45]	15.1" [384]	12.4" [315]	2.9" [73]	2.9" [73]	4

Dimensions

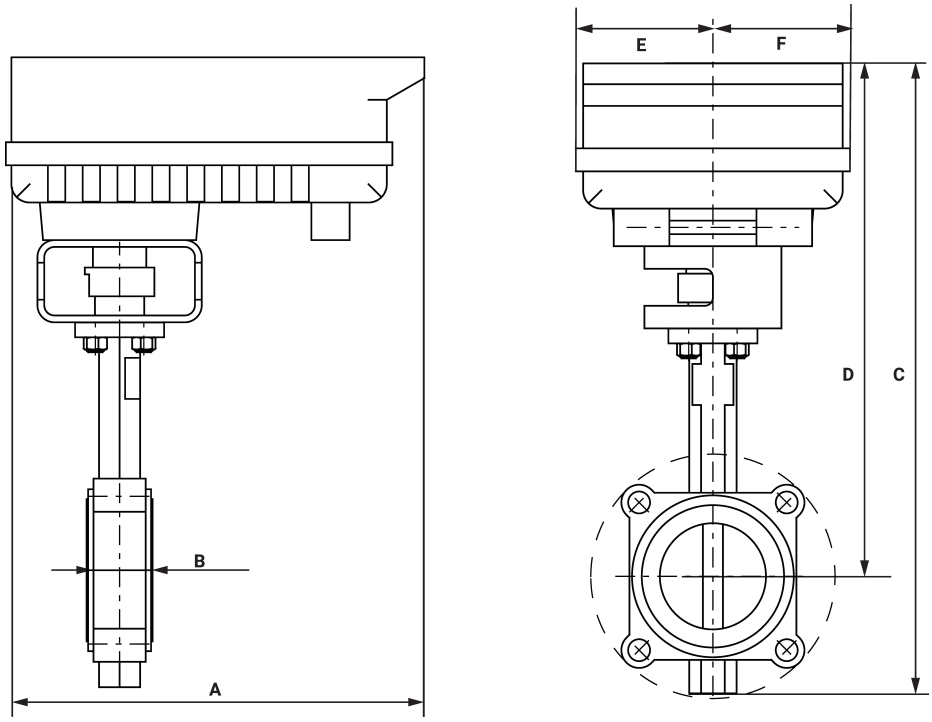

Valve with PR Actuator

A	B	C	D	E	F	Number of Bolt Holes
12.0" [304]	1.8" [45]	16.7" [425]	13.9" [354]	3.9" [100]	3.9" [100]	4

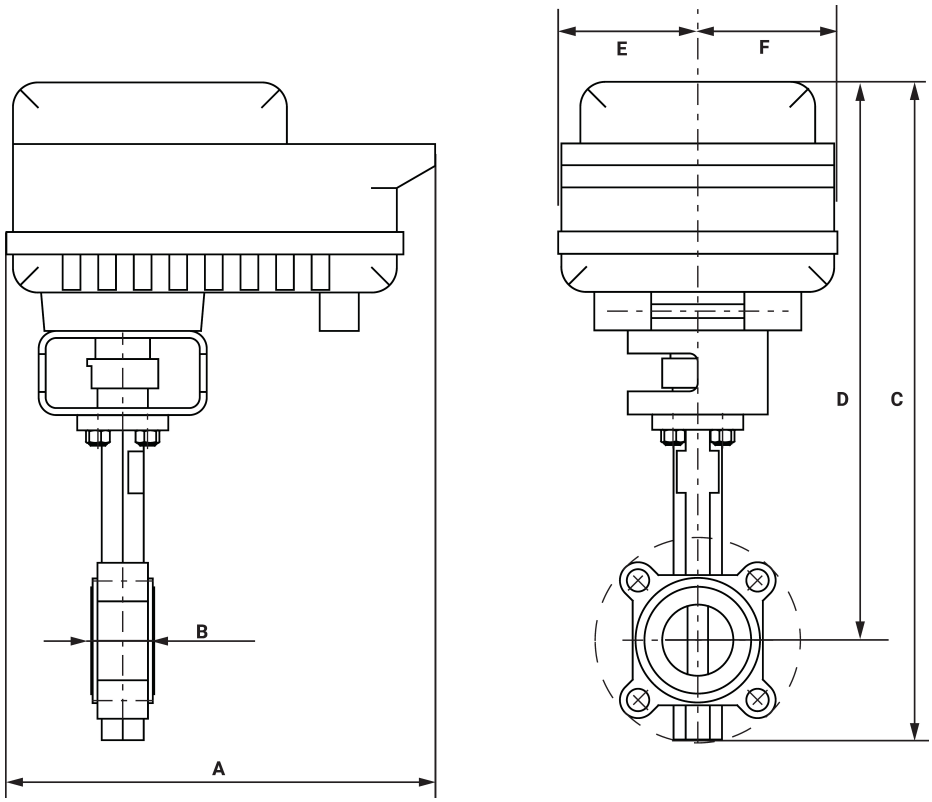

Valve with PK Actuator

A	B	C	D	E	F	Number of Bolt Holes
12.0" [304]	1.8" [45]	18.5" [470]	15.7" [399]	3.9" [100]	3.9" [100]	4
A	B	C	D	E	F	Number of Bolt Holes
10.8" [275]	1.8" [45]	13.0" [330]	10.2" [260]	2.9" [73]	2.9" [73]	4

BELIMO

On/Off, Floating point, Non fail-safe, 100...240 V

Technical data sheet GRCX120-3

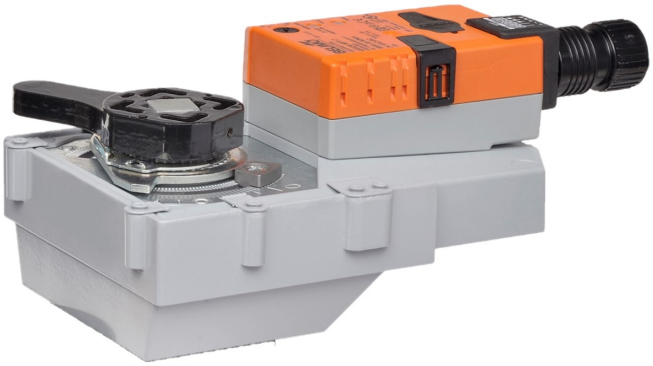

5-year warranty

Technical data

Electrical data	Nominal voltage	AC/DC 100...240 V
	Nominal voltage frequency	50/60 Hz
	Nominal voltage range	AC 85...265 V
	Power consumption in operation	6 W
	Power consumption in rest position	2 W
	Transformer sizing	11 VA
	Electrical Connection	18 GA plenum cable, 1 m, with 1/2" NPT conduit connector, degree of protection NEMA 2 / IP54
	Overload Protection	electronic thoughout 0...90° rotation
Functional data	Direction of motion motor	selectable with switch 0/1
	Manual override	external push button
	Angle of rotation	90°
	Angle of rotation note	adjustable with mechanical stop
	Running Time (Motor)	35 s / 90°
	Running time motor note	constant, independent of load
	Noise level, motor	60 dB(A)
	Position indication	integrated into handle
Safety data	Power source UL	Class 2 Supply
	Degree of protection IEC/EN	IP54
	Degree of protection NEMA/UL	NEMA 2
	Enclosure	UL Enclosure Type 2
	Agency Listing	cULus acc. to UL60730-1A/-2-14, CAN/CSA E60730-1:02 CE acc. to 2014/30/EU and 2014/35/EU
	Quality Standard	ISO 9001
	UL 2043 Compliant	Suitable for use in air plenums per Section 300.22(C) of the NEC and Section 602 of the IMC
	Ambient humidity	Max. 95% RH, non-condensing
	Ambient temperature	-22...122°F [-30...50°C]
	Storage temperature	-40...176°F [-40...80°C]
	Servicing	maintenance-free
Weight	Weight	2.7 lb [1.2 kg]
Materials	Housing material	Galvanized steel and plastic housing

Footnotes †Rated Impulse Voltage 2.5kV, Type of Action 1.AA, Control Pollution Degree 3.

Electrical installation

INSTALLATION NOTES

(A) Actuators with appliance cables are numbered.

(1) Provide overload protection and disconnect as required.

(2) Actuators may be connected in parallel. Power consumption and input impedance must be observed.

Meets cULus requirements without the need of an electrical ground connection.

Warning! Live electrical components!

During installation, testing, servicing and troubleshooting of this product, it may be necessary to work with live electrical components. Have a qualified licensed electrician or other individual who has been properly trained in handling live electrical components perform these tasks. Failure to follow all electrical safety precautions when exposed to live electrical components could result in death or serious injury.

Wiring diagrams

On/Off AC 100...240 V

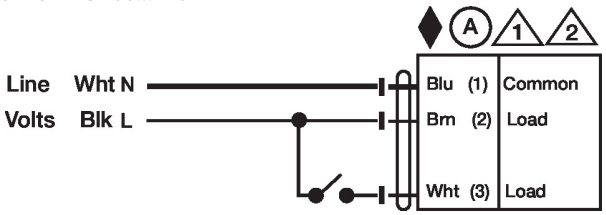
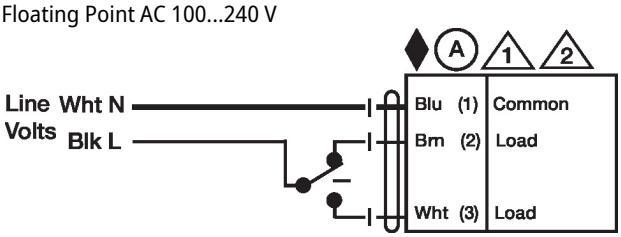
Floating Point AC 100...240 V