Butterfly Valve with Lug types

- Disc 304 stainless steel
- Bubble tight shut-off
- Resilient seat
- Valve face-to-face dimensions comply with API 609 & MSS-SP-67
- Completely assembled and tested, ready for installation

5-year warranty

Type overview

Type	DN
F650HD	50

Technical data

Functional data	Valve size [mm]	2" [50]
	Fluid	chilled or hot water, up to 60% glycol
	Fluid Temp Range (water)	-22...250°F [-30...120°C]
	Body Pressure Rating	ANSI Class Consistent with 125, 232 psi CWP
	Close-off pressure Δps	200 psi
	Flow characteristic	modified equal percentage
	Leakage rate	0% leakage, leakage rateA
	Pipe connection	Flange for use with ASME/ANSI class 125/150
	Servicing	maintenance-free
	Flow Pattern	2-way
	Controllable flow range	90° rotation
	Cv	115
	Maximum Velocity	12 FPS
	Lug threads	5/8-11 UNC
Materials	Valve body	Ductile cast iron ASTM A536
	Body finish	epoxy powder coating (blue RAL 5002)
	Stem	416 stainless steel
	Stem seal	EPDM (lubricated)
	Seat	EPDM
	Bearing	RPTFE
	Disc	304 stainless steel
Suitable actuators	Non Fail-Safe	ARB(X) GRB(X)
	Spring	AFRB(X)

Product features

Flow/Mounting details

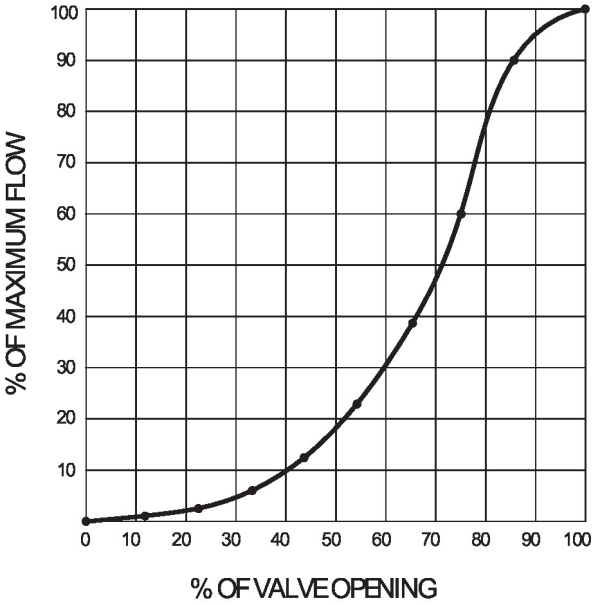

Dimensions

Type	DN	Weight
F650HD	50	12 lb [5.3 kg]

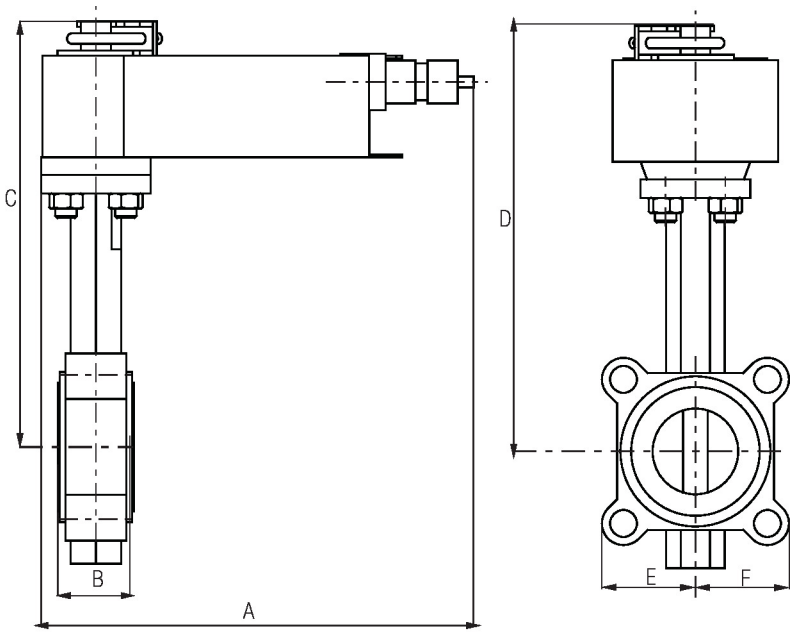

Valve with AFR Actuator

A	B	C	D	E	F	Number of Bolt Holes
10.1" [257]	1.8" [45]	12.3" [312]	9.5" [241]	2.9" [73]	2.9" [73]	4

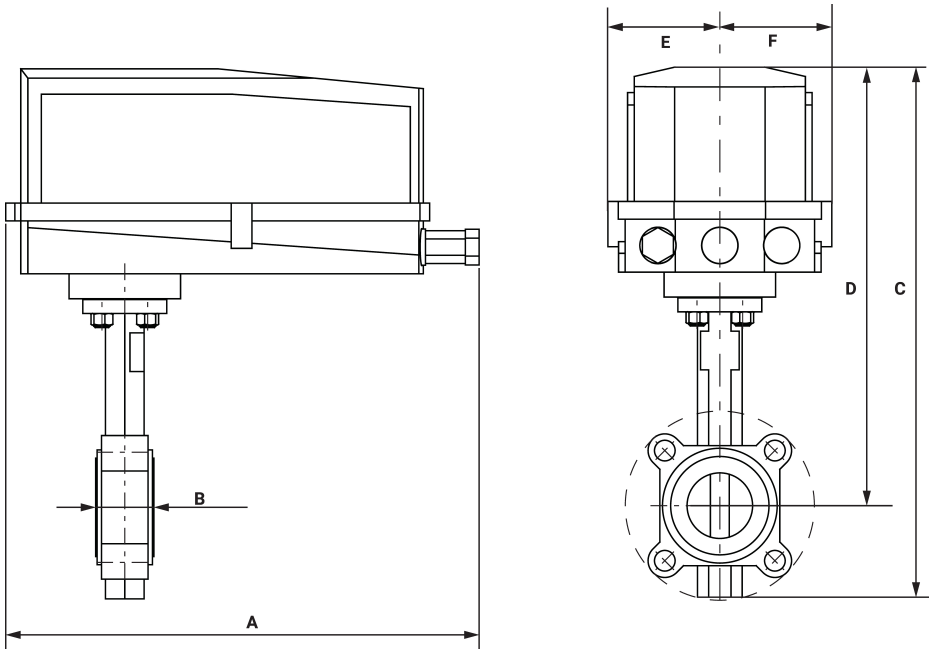

Valve with AF/GR N4 Actuator

A	B	C	D	E	F	Number of Bolt Holes
14.5" [368]	1.8" [45]	16.1" [409]	13.3" [338]	3.4" [86]	3.4" [86]	4

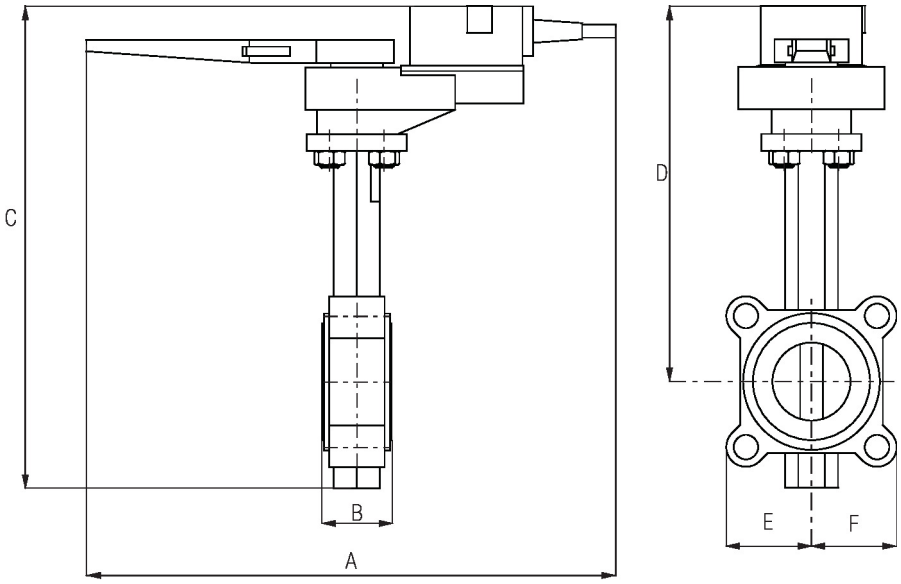

Valve with ARB/GRB Actuator

A	B	C	D	E	F	Number of Bolt Holes
14.6" [370]	1.8" [45]	12.4" [314]	9.7" [246]	2.9" [73]	2.9" [73]	4

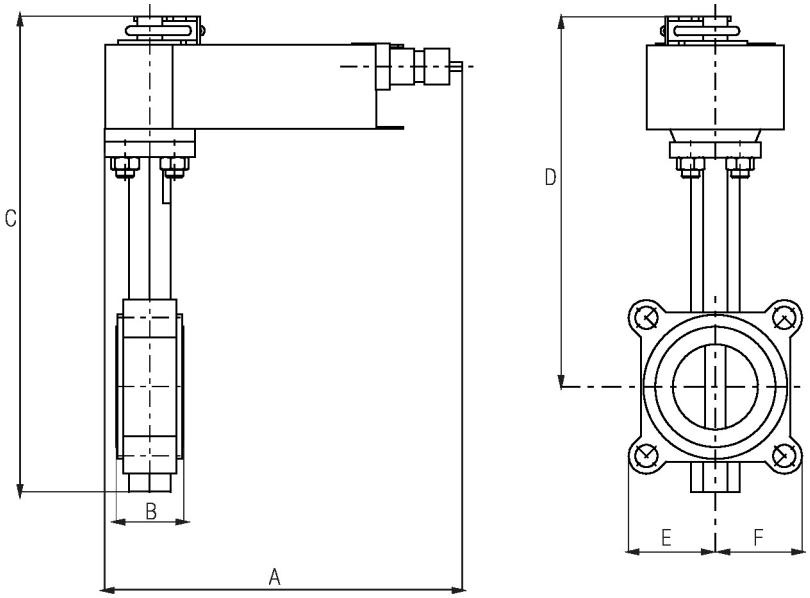

Valve with AFB/AFX Actuator

A	B	C	D	E	F	Number of Bolt Holes
10.1" [257]	1.8" [45]	15.1" [384]	12.4" [315]	2.9" [73]	2.9" [73]	4

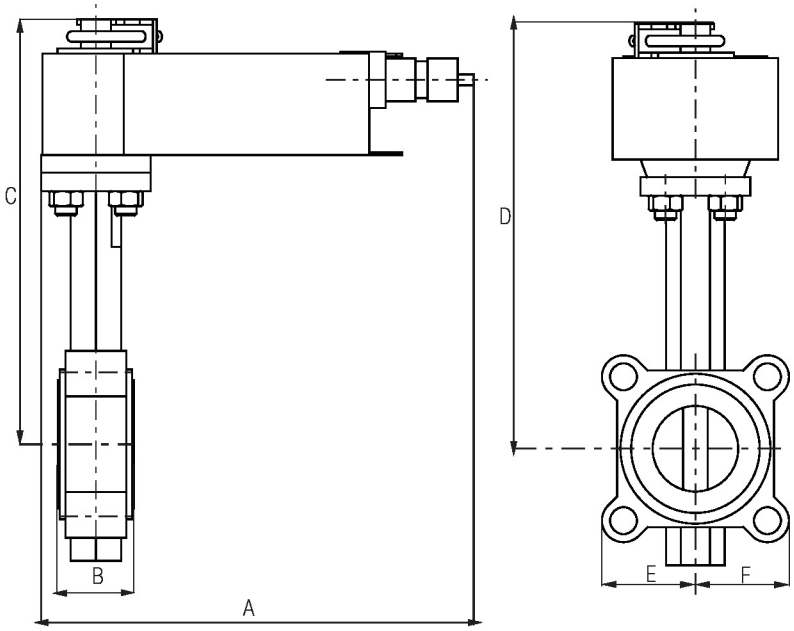

Valve with AMB/AMX Actuator

A	B	C	D	E	F	Number of Bolt Holes
8.3" [211]	1.8" [45]	15.1" [384]	12.4" [315]	2.9" [73]	2.9" [73]	4

Dimensions

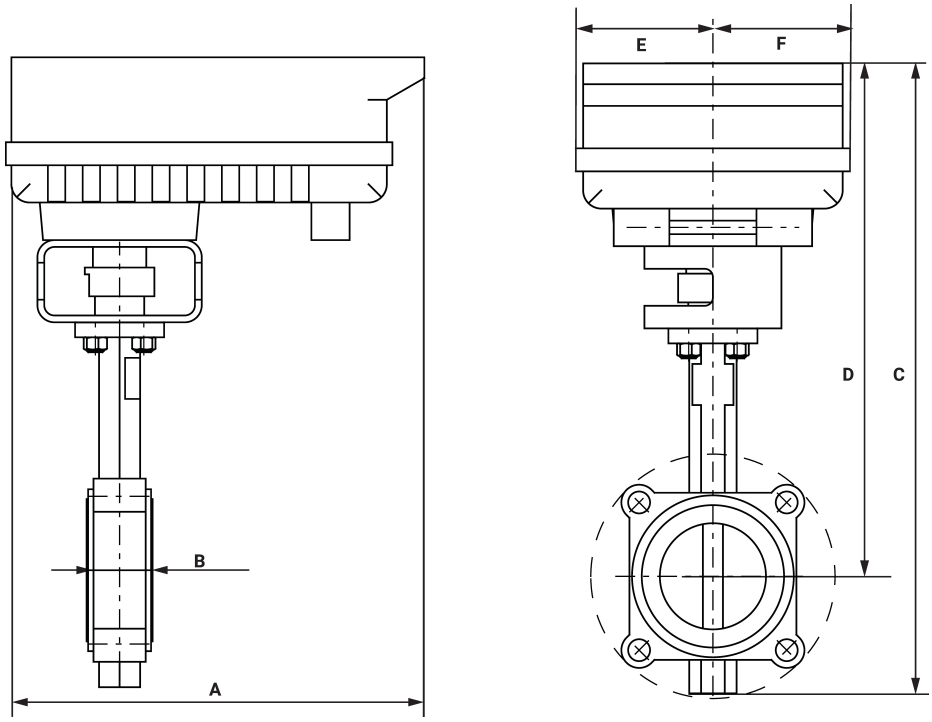

Valve with PR Actuator

A	B	C	D	E	F	Number of Bolt Holes
12.0" [304]	1.8" [45]	16.7" [425]	13.9" [354]	3.9" [100]	3.9" [100]	4

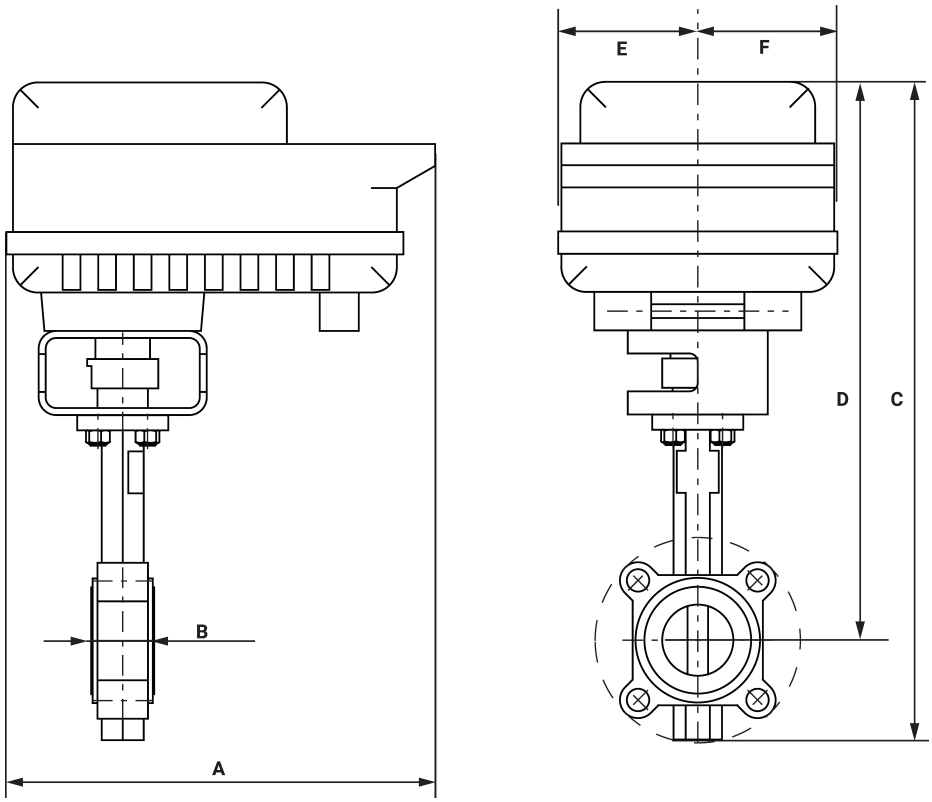

Valve with PK Actuator

A	B	C	D	E	F	Number of Bolt Holes
12.0" [304]	1.8" [45]	18.5" [470]	15.7" [399]	3.9" [100]	3.9" [100]	4
A	B	C	D	E	F	Number of Bolt Holes
10.8" [275]	1.8" [45]	13.0" [330]	10.2" [260]	2.9" [73]	2.9" [73]	4

Modulating, Non fail-safe, 100...240 V

5-year warranty

Technical data

Electrical data	Nominal voltage	AC 100...240 V
	Nominal voltage frequency	50/60 Hz
	Nominal voltage range	AC 85...265 V
	Power consumption in operation	6 W
	Power consumption in rest position	2 W
	Electrical Connection	1/2" NPT conduit connector, screw terminals
	Overload Protection	electronic thoughout 0...90° rotation
Functional data	Input impedance	500 Ω
	Position feedback U	2...10 V
	Position feedback U note	Max. 0.5 mA
	Direction of motion motor	selectable with switch 0/1
	Manual override	under cover
	Angle of rotation	90°
	Angle of rotation note	adjustable with mechanical stop
	Running Time (Motor)	35 s / 90°
	Running time motor note	constant, independent of load
	Noise level, motor	60 dB(A)
	Position indication	Mechanical, 5...20 mm stroke
Safety data	Degree of protection IEC/EN	IP66/67
	Degree of protection NEMA/UL	NEMA 4X
	Housing	UL Enclosure Type 4X
	Agency Listing	cULus acc. to UL60730-1A/-2-14, CAN/CSA E60730-1:02, CE acc. to 2014/30/EU and 2014/35/EU
	Quality Standard	ISO 9001
	Ambient humidity	Max. 100% RH
	Ambient temperature	-22...122°F [-30...50°C]
	Ambient temperature note	-40...50°C [104...122°F] for actuator with integrated heating
	Storage temperature	-40...176°F [-40...80°C]
	Servicing	maintenance-free

Technical data

Weight	Weight	6.9 lb [3.1 kg]
Materials	Housing material	Die cast aluminium and plastic casing

Footnotes †Rated Impulse Voltage 4kV, Type of action 1, Control Pollution Degree 3.

Accessories

Factory add-on option only	Description	Type
	Heater, with adjustable thermostat	ACT_PACK_H
	Heater, with adjustable thermostat	ACT_PACK_Y

Electrical installation

INSTALLATION NOTES

1 Provide overload protection and disconnect as required.

2 Actuators may be connected in parallel. Power consumption and input impedance must be observed.

5 Only connect common to negative (-) leg of control circuits.

7 A 500 Ω resistor (ZG-R01) converts the 4...20 mA control signal to 2...10 V.

16 Actuators are provided with a numbered screw terminal strip instead of a cable.

Meets cULus requirements without the need of an electrical ground connection.

Warning! Live electrical components!
During installation, testing, servicing and troubleshooting of this product, it may be necessary to work with live electrical components. Have a qualified licensed electrician or other individual who has been properly trained in handling live electrical components perform these tasks. Failure to follow all electrical safety precautions when exposed to live electrical components could result in death or serious injury.

Wiring diagrams
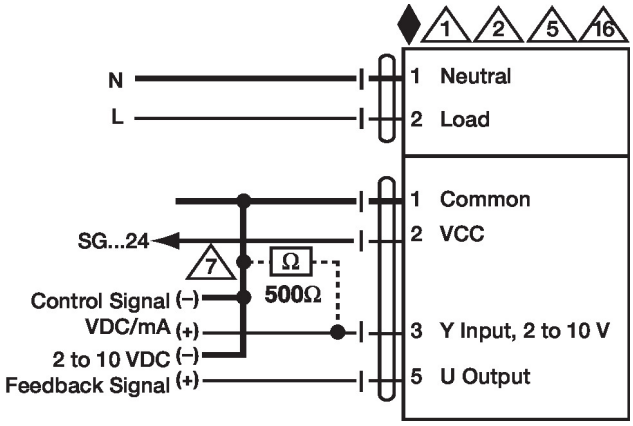
2...10 V / 4...20 mA Control AC 100...240 V