ESC Series

Solenoid Coils

A1 A2L A3

General information

Different COPELAND products require solenoid coils for operation.

Depending on the application, the location and the desired supply voltage, different coils of ESC Series are currently available.

ESC-24VAC

Features

- Compact hermetic design with a low weight
- Standard coils for AC and DC
- Universal application possible: for valves on liquid, suction, hot gas, oil lines
- Designed for continuous operation
- Reduced power consumption
- Insulated coil windings provide a high shock and vibration resistance
- Short response times
- For valves compatible with various media (ATEX versions for A2L/ A3 refrigerants)
- Simple and quick assembly with screw cap
- All models meet the requirements for CE & UKCA marking; several models with additional UL, CMIM or ATEX approvals.
- Highest flexibility for your application requirements by ordering coils and associated accessories separately

ESC-EX24VAC

(Ex II 3G Ex nA IIA T3 Gc U)

Technical Data

Supply Voltage variation	±10 %
Vibration resistance	0.7 g 10 ... 200 Hz
Compatibility (valve) ESC-… ESC-EX… NOTE: See Copeland Selection Guide on next page.	 A1 Refrigerants A2L & A3 Refrigerants
Ambient Temperature ESC-… ESC-EX…	 -40…+60 °C -10…+50 °C
Protection class (EN 60529)	IP65 (with assembled plug/ cable)

Markings	CE		c UL us	Ex
ESC-120/230/M230VAC	√	√	√	
ESC-24/M24VAC			√	
ESC-24VDC				
ESC-W24VAC				
ESC-W230VAC	√	√		
ESC-EX24/EX230VAC	√			√

Coil Type	Expansion Valves		Solenoid Valves							Oil management		
	EX2	CX2	100RB 200RB	200RH	200RC	240RA	540RA	110RB-FLR 200RB-FLR	M36	OM3/4	OM5	OM3-020P
ESC-24VAC	A1		A1	A1	A1	A1	A1		A1	A1 (2) A2L		A3 (3)
ESC-230VAC	A1		A1	A1	A1	A1	A1		A1	A1 (2) A2L		
ESC-120VAC			A1	A1		A1	A1		A1			
ESC-24VDC			A1			A1	A1		A1			
ESC-W24VAC		A1									A1	
ESC-W230VAC		A1									A1	
ESC-M24VAC		A1		A1 (4)	A1 (4)							
ESC-M230VAC(4)		A1		A1 (4)	A1 (4)							
ESC-EX24VAC	A2L		A2L	A2L		A2L (1)	A2L (1)	A3	A2L			
ESC-EX230VAC	A2L		A2L	A2L		A2L (1)	A2L (1)	A3	A2L			

NOTE 1: ***(1) A2Lnot for types: 240 RA 16 T11, 240 RA20T11/13/17, 540 RA20 T11***

NOTE 2 ***(2) Shall be positioned out of the potentially flammable zone where any leaked refrigerant could flow or stagnate or shall be sufficiently ventilated, so the concentration of any leaked refrigerant never reaches 50% of Lowest Flammable Limit.***

NOTE 3: ***(3) Only for use with R290. Installation only in non-flammable environment.***

NOTE 4: ***(4) Temperature impacts MOPD and ESC coil use. Please refer to Technical Information of the used device.***

NOTE 5: ***ESC coil is the successor model of ASC- and ASC3 Coils. Replacement with ASC3-…/ ASC-…always requires the replacement of existing O-rings. Only use O-rings approved for ESC!***

Coils

Type	Part No.	Supply Voltage	Power Input	Description	Temperature range	Illustration
ESC-24VAC	**801033** **801033M***	24 VAC ±10 % 50(60) Hz	17 VA, 8 W	IP65 with plug/cable assembly acc. EN 60529 test conditions	-40...+60 °C	
ESC-230VAC	**801031** **801031M***	230 VAC ±10 % 50(60) Hz	17 VA, 8 W			
ESC-120VAC	**801032** **801032M***	120 VAC ±10 % 50(60) Hz	17 VA, 8 W			
ESC-24VDC	**801030** **801030M***	24 VDC	17 W			
ESC-M24VAC	**801304** **801304M***	24VAC ±10 % 50(60) Hz	25 VA, 16 W			
ESC-M230VAC	**801027** **801027M***	230 VAC ±10 % 50(60) Hz	25 VA, 16 W			
ESC-W24VAC	**801028** **801028M***	24 VAC ±10 % 50(60) Hz	38 VA, 18 W			
ESC-W230VAC	**801029** **801029M***	230 VAC ±10 % 50(60) Hz	38 VA, 18 W			
ESC-EX24VAC	**801035**	24 VAC ±10 % 50 Hz	17 VA, 8 W	IP65 with molded cable assembly with 3 m length **II 3G Ex nA IIA T3 Gc U**	-10…+50 °C	
ESC-EX230VAC	**801036**	230 VAC ±10 % 50 Hz	17 VA, 8 W			

Cable Assembly for ESC Coils

Type	Part No.	Description	Cable length	Temperature range	Illustration
ASC-N15	**804570** **804570M***	Connector Cable Assembly to Relay, loose wires 3 x 0.75 mm^2 (valve use)	1.5 m	-50…+80 °C (valid for stationary use)	
ASC-N30	**804571** **804571M***		3.0 m		
ASC-N60	**804572**		6.0 m		
OM3-P30	**805141**	Connector Cable Assembly to Power supply and Coil,, loose wires (Oil management use)	3.0 m	-50…+80 °C (valid for stationary use)	
OM3-P60	**805142**		6.0 m		
OM3-P100	**805146**		10 m		
OM-230V-3	**805163**	Connector Cable Assembly to power supply, loose wires (Oil management use)	3.0 m	-20…+50 °C (valid for stationary use)	
OM-230V-6	**805164**		6.0 m		

Others

Type	Part No.	Description	Illustration
Plug PG9	**801012**	Plug acc. EN175301 with cable gland (cable Ø 4.5-7 mm)	
Plug PG11	**801013**	Plug acc. EN175301 with cable gland (cable Ø 6-9 mm)	
ESC-K01	**801034**	Screw cap (incl. cap, 2x O-ring & fixing retainer)	

NOTE:*) M = Multipack = 20 pcs. Coils are delivered with retainer kit. Please order cable assemblies separately.

Dimensions ESC Coils (mm)

Type	top	front	side
ESC-24VAC **ESC-230VAC** **ESC-120VAC** **ESC-M24VAC** **ESC-M230VAC** 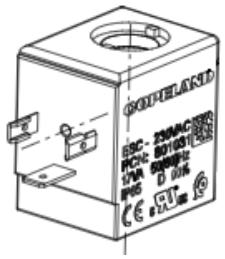	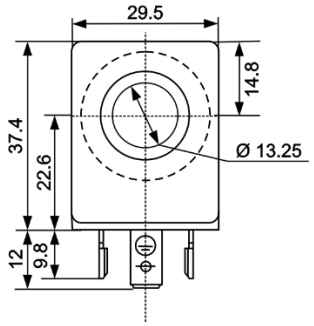	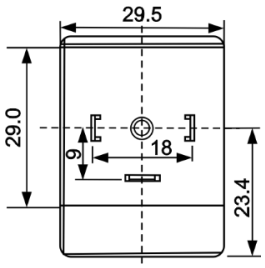	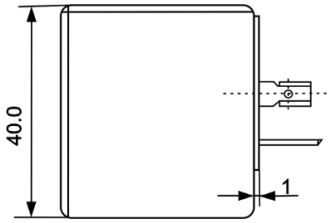
ESC-W24VAC **ESC-W230VAC** **ESC-24VDC** 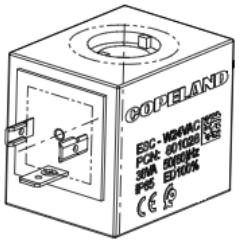	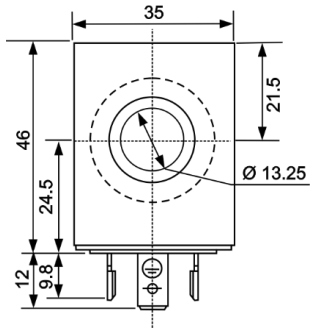	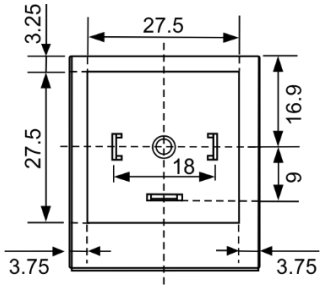	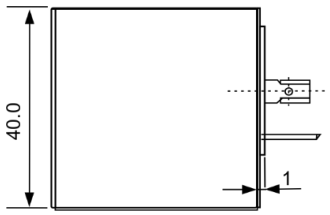
ESC-EX24VAC **ESC-EX230VAC** 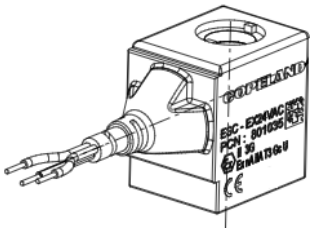	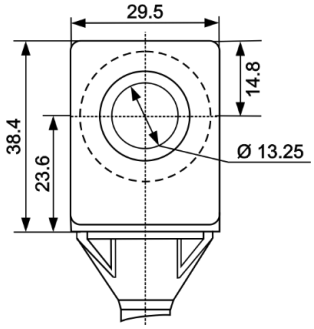	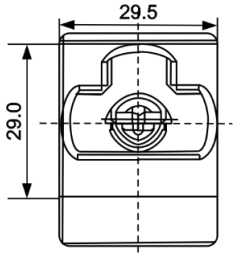	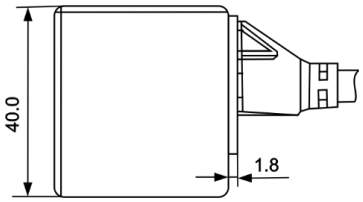

DISCLAIMER: The Copeland logo is a trademark and service mark of Copeland LP or one of its affiliates. Copeland Europe GmbH shall not be liable for errors in the stated capacities, dimensions, etc., as well as typographic errors. Products, specifications, assumptions, designs and technical data contained in this document are subject to modification by us without prior notice. Illustrations are not binding. ©2025 Copeland LP. All rights reserved.